THE SCHOOL DISTRICT OF PHILADELPHIA
Office of Capital Programs
440 North Broad Street, 3rd Floor – Suite 371
Philadelphia, PA 19130

TELEPHONE: (215) 400-4730

Addendum No. 2

Subject: Motivation High School – Major Renovations
SDP Contract Nos. B-014C, B-015C, B-016C, B-017C of 2017/18

Location: Motivation High School
5900 Baltimore Avenue
Philadelphia, Pennsylvania 19143

This Addendum, dated 22nd of March, 2018, shall modify and become part of the Contract Documents for the work of this project. Any items not mentioned herein, or affected by, shall be performed strictly in accordance with the original documents.

The following items, clarifications and/or revisions are to be included in the Contract Documents:

SUBSTITUTION REQUESTS

Spec 076200, Section 2.3, Part B: Proposed product substitution - Jiffy Seal Ice and Water Guard HT by Protecto Wrap Company.

Spec 084113, Section 2.2, Part A: Proposed product substitution – Tubelite E14000 Series Storefront (2" x 4 ½", ctr. Set, flush-glazed, non-thermal, ¼" – 1" glazing).

These requests are premature. Substitution requests are considered at the time of product and shop drawing submissions, per General Conditions GC-4.23 SUBSTITUTIONS (OR EQUAL)

BIDDER'S QUESTIONS

Q: Please provide the sign-in sheet from the walkthrough.
A: The sign-in sheet from the Pre-Bid Walkthrough and Conference on March 12, 2018 is attached.

Q: Spec Section 105113 Metal Lockers- Locker repair: What is the intent for repairs? Also, if the locker repairs are somewhat scheduled a year or so in the future, we don't know how to quote on a repair job that could potentially have subsequent damage from the time of the quote to the time line for the locker repairs?
A: See drawings A101 and A104 for locker locations; metal lockers on the second floor (363 total) and in each of the Gymnasium Locker Rooms on the First Floor – Building A (54 each for a total of 104) require repair and painting. Locker Repair work is identified in Specification Section 10 5113, 2.3, A-G. This work would apply to 467 lockers within the school. Elevations 6,7/A807 identify additional panels to be provided where missing in Locker Rooms A108 and A152. See revised drawings A807 and A811, identifying percentages of locker repair.

Q: Phasing of the project: In regards of access, will we be able to work on different phases at the same time, if not what will be the duration between each phase needed for school district activities (ie: moving of furniture/equipment) before we get the next phase?
A: Contractors will not be able to work on different phases concurrently. Phase durations include 5 days for moving of furniture and equipment. Moving of furniture and equipment will be coordinated by SDP.

Contractors shall prepare schedules according to the phasing plan and include the time required for moving furniture and equipment within each phase.

Q: Drawing ED111C notes 2 & 6: Is auditorium light demo by AAC contractor or Electrical contractor?
A: Auditorium lighting is demolished by AAC contractor.

Q: Demo Drawing & Power Drawings: Drawings show the removal & re-installation of PA System speakers, who is responsible to remove & re-install approximately 40 fire alarm smoke detectors and 32 ceiling mount CCTV cameras?
A: Electrical contractor shall be responsible for the removal and reinstall of the fire alarm devices and CCTV cameras.

Q: Drawing 111B: The type “H” fixture is shown as two (2) different symbols on drawings (Boiler Room and Stairways) is this the same model fixture?
A: Yes, it is the same fixture.

Q: Drawing in E111B: What type light fixture on rooms B102A & B104C?
A: Fixture D.

Q: Can you provide a quantity of dimmers & loads each for the dimmer rack?
A: 35-40 dimmers and roughly 1200VA per dimmer.

Q: Is the O-10V dimming control wiring to each light required? It is not shown or called for on the drawings or specs.
A: Yes, provide the control wiring.

Q: ETC dimmers require separate neutral for each dimmer, drawings call to re-connect existing wires. Does each circuit have a dedicated neutral?
A: Provide provisions to add a neutral wire as necessary.

Q: Drawing E111C Note #3: Auditorium & stage lights have no controls, building engineer uses a flashlight to turn non-switch rated breakers on & off for lighting. Do we connect new lighting to existing breakers with no other controls?
A: The auditorium lights shall be connected to the new dimmer panel. The general stage lighting shall also be connected to the new dimmer panel. The theatrical lighting shall be reconnected to the existing panel circuit breakers on/off.

Q: Drawing 121B; Panel B1A1: Note 1 states “disconnect provided by equipment manu.”, is this a typo and should be new panel location?
A: Correct, it is a typo and that is the new panel and new location.

Q: Drawing E121A: Who provides control wiring for chair lifts & folding partitions?
A: Electrical contractor shall provide control wiring for chair lifts and partition.

Q: Drawing E121B & Spec 260533 Page 7: Is rigid conduit required for all wiring in the boiler room?
A: Yes, rigid is required for all wiring in boiler room.

Q: Drawing E302: Who is the manufacturer of existing panels?
A: Square D is the manufacturer.

Q: Drawing E121B: Who installs all the manufacturer supplied disconnects and VFDS for the HVAC equipment?
A: Electrical Contractor shall install all the manufacturer supplied VFDS and disconnects.

Q: Drawing E121B: Does panel PB1B feed AHI-15? Is the circuit breaker new or existing?
A: Yes, PB1B is the panel and the circuit breaker is existing.

Q: Drawing E121B; Note 4: Do you have make, model or size for new panel trim in transformer room?
A: Square D, NQOB44-27214B.

Q: Drawing E121B: Is VFD cable required for pumps 1 thru 8 on the load side of VFD for distance?
A: Yes, VFD cable is required on load side of VFD.

Q: Drawing 123B: What does “TW” or “IPB” next to the double duplex receptacle mean?
A: TW is for “Teaching wall” and IPB is for “Instructional Power Board” or smart board. It is just identifying where in the classroom these items will be.

Q: Drawing E123B; E124B: What is the location of panel PB3D?
A: PB3D is located in mechanical room B321 on sheet E123B. Panel PB3C is located in mechanical room B327 on sheet E123B.

Q: Drawing E001 drawing list shows a ED121A, first floor power demolition. My package does not contain this drawing. Does it exist?
A: Drawing ED121A does not exist, please disregard.

Q: Spec 230923: Carrier formally request to be added to the ATC manufacturers list for Motivation High School Project. Carrier is currently installing controls at 4 Philadelphia schools and has completed more than 10 projects over the last 4 years. All of our controls exceed the project specifications.
A: Request is premature. See- GC-4.23 SUBSTITUTIONS (OR EQUAL) for requirements.

Q: Referencing drawing E111B, Bathroom B104C, also identified as Nurses Recep. B102A, contains (4) downlights which are not identified. Please specify luminaire type.
A: Fixture D.

Q: Spec 230923: This specification calls for Software, Network cabling, color graphics and operator interface PC. Is this required? In the past Philadelphia schools have not required or wanted a front end or networked BAS.
A:
1. See specification section 23 09 23 1.2 A.6 and 1.2.B.1 indicating that BAS is NOT required for this project and that all new DDC controls shall on be on local control panels. Referenced graphics for local DDC panel graphics only.
2. Any non-edited references that may have been made to BAS (such as specification section 238223 2.11.D) are intended for local control panel (for AHU’s) or at main control panel in Boiler room (Unit Ventilators, relief dampers, exhaust fans, etc.) – See drawing M201 for location of main DDC panels for systems other than AHU’s.
3. References to BAS as indicated specification section 23 09 23 1.2 A.6 and 1.2.A.4 is for connection to future BAS.

Q: Spec 230923: This specification does not call for any operator interface on the stand alone control panels, Normally we include a LCD display/touch interface to allow the school to set scheduling and adjust set-points, is this required? If not how will they change schedule and set-points?
A:
1. Each AHU is provided with a stand-alone DDC control panel/starter, shown for each unit DDC control diagram and floor plans shown as DDC
2. Schedules and set points are changed at local control panel, not from some city-wide BAS. Schedule set points specified for Unit ventilators shall be from new control panel in boiler room. See Drawing M201, notes 43 thru 46 for provision and location of additional control panels.

Q: Drawing M606 – Typical Unit Ventilator Control Diagram and Point List: This unit does not show and freeze-stat, and face/bypass damper, this is normally a standard on all Philadelphia Schools jobs. Point list calls for face/bypass but drawing shows outside and return air MOD, which one is correct outside air/economizer or both? This shows space temp, most of the past school jobs have been controlled by return air, is space temp required?
A:
1. Return air and outside air damper with common link is intended. See specification section 238223 2.7.
2. Control by Return air instead of remote temperature sensor is acceptable.
3. Yes, a freeze stat is required. Freeze stat is by Unit Ventilator manufacturer. See specification section 238223, 2.11.C.1 and revised drawing M606.

Q: We are aware that on a number of PSD projects there have been mold concerns. Should an antimicrobial lining be included on the interior of the air handling units?

A:

1. See Specification section 237313: Paragraphs 1.8.D and 2.2.A.7 which reference compliance to ASHRAE 62.1 chapter 5.
2. ASHRAE 62.1 chapter 5.4.1 calls for Resistance to Mold Growth per UL 181, and ASTM C1338.
3. Antimicrobial treatment is expected per specifications.

Q: Auditorium Seating Concern: The Summary of work #22 includes refurbishment of auditorium chairs. There are no specification for these in documents. CSI codes classify auditorium seating as furniture. The General Plan Note #4 on sheet A103 States "All Furniture Is Not In Contract". Are the General Construction Contractors to include pricing for the refurbishment? If so is there a specification that we are to follow?

A: See new specification Section 12 6100 – Fixed Audience Seating Repair. GC to provide work for refurbishment of auditorium chairs. As fixed elements, this is not considered furniture.

CHANGES TO DRAWINGS

Drawing: C2.0
Revisions:

a. Additional demolition of existing concrete full depth
b. Additional demolition and Removal of existing 4" and 6" drain pipe

Drawing: C3.0/3.1
Revisions:

a. Additional concrete full depth, color to match existing

Drawing: C4.0/4.1
Revisions:

a. Removal of level spreader in rear drainage area
b. Additional 6" Dia. VCP
c. Additional 12" Dia. VCP
d. 4 Additional 2' Square Catch Basins (With solid lids)
e. 1 Additional VCP Wye Connection

Drawing: C4.2
Revisions:

a. Profiles moved to sheet C4.4

Drawing C4.3
Revisions:

a. Level spreader detail removed.
b. Detail C-23 updated with solid grate cover and schedule

Drawing: C4.4, see sheet C4.4
Revisions:

a. Pipe Profile sheet added

Drawing: AD011
Revisions:

a. **DELETE** Tag D25 from the following door locations: at Visitor's Lockers (Doors to A108B and A109B), door A108-1E and door A109-1E.

Drawing: AD011 through AD015
Revisions:

a. **MODIFY** Tag D13 to read 'GC to remove Window System, solar shade & Security Screen'.

Drawing: AD013
Revisions:

a. **REMOVE** 16 Fixed Audience Chairs to provide accessible seating locations.

Drawing: AD022 through AD027
Revisions:

a. **MODIFY** Tag 1 to read 'GC to remove Window System & Security Screen'.

Drawing: A102
Revisions:

a. **ADD** door tag B126-1 to Learning Lab B126 door.

Drawing: A103
Revisions:

a. **ADD** accessible seating locations in Auditorium.

Drawing: A121 through A125
Revisions:

a. **ADD** General Note 2.) EC to remove or secure existing smoke detectors and CCTV cameras before existing ACT may be demolished. Reinstall in new ACT ceilings.

Drawing: A601 & A602
Revisions:

a. **MODIFY** door schedule as noted on drawing. **MODIFY** all Classroom Door Types to be Type D. **ADD** door B126-1.

Drawing: A807
Revisions:

a. **MODIFY** note on elevations 6 and 7 to **ADD** "Assume 75%".

Drawing: A811
Revisions:

a. **ADD** General Note 8.) GC to provide repairs for 40 percent of lockers on the Second Floor. Utilize salvaged components from Third Floor Lockers before purchasing new.

Drawing: A901
Revisions:

a. **ADD** General Note 1). Paint all Fin Tube Radiator covers to match unit ventilator cover. Secure all loose Fin Tube covers. Provide new covers where missing/damaged beyond repair first using components salvaged from other locations, then new. Provide new at ten locations to be verified in field with SDP.

Drawing: M-606
Revisions:

a. **REVISE** unit ventilator sequence of operation indicating freeze stat location and sequence.

Drawing: M111-B, M112-B, & M113-B
Revisions:

a. **ADD** Note: Fin-Tube Radiation Repair Note: 1. Secure all Fin-tune radiator loose covers. Paint all covers (match finish of new UV). Provide new covers where missing/damaged beyond repair first using components salvaged from other locations, then new per architect approval. Provide new FTR covers at a minimum of ten locations to be verified in field with SDP.

Drawing: M201 and M505
Revisions:

a. MODIFY Generator Exhaust to outlet at roof

CHANGES TO SPECIFICATIONS

(REISSUED SPECS: ADDITIONS SHOWN IN **BOLD,** DELETIONS SHOWN WITH A ~~STRIKETHROUGH~~)

Section: 01 1300 Time of Completion, Milestones, Phasing or Sequencing Requirements
Revisions:

a. Section 1.2, B; **REVISE** to read 'NOTE: WORK AT THE SITE WILL NOT BE PERMITTED UNTIL OCTOBER 1, 2018.'

Section: 07 0150.74 Roofing Membrane Repair
Revisions:

a. Section 1.2,B; **DELETE** title Related Sections, **ADD** title NOT USED
b. Section 1.2, C; **ADD** title Related Sections
c. Section 1.2, D,1; **ADD** f. Roofing Contractor shall examine insulation layer at areas of roof penetrations and replace any water damaged insulation within 2 feet of penetration.
d. Section 1.2, D; **ADD** 3. Roof membrane. a. Examine Roof for air pockets and lack of adhesion that exceed 5 square feet. b. Provide membrane repair in these areas.

Section: 12 6100 Fixed Audience Seating Repair
Revisions:

a. **ADD** section in entirety.

Section: 08 7100 Door Hardware
Revisions:

a. Hardware Set #02, **ADD** doors C100B-3E and C100B-4E to set.
b. Hardware Set #07, **ADD** doors C100B-1E and C100B-2E.

Section: 10 1423 Panel Signage
Revisions:

a. Section 2.1, C: **REVISE** to read 'Signs: Acrylic laser-etched to produce raised text, symbols and braille; size as noted on A910, 90 degree corners'.
b. Section 2.1, D: **REVISE** to read 'Lettering: Color and position as selected; Stymie Bold style, characters raised 1/32 inch.
    1. Room numbers, 1 1/2 inch high numerals.
    2. Room names with number 1/2 inch high upper case.
    3. Stairway signs 1/2 inch high upper case.
c. Section 2.1, G: **DELETE** text 'and stair entry doors'.
d. Section 2.1, I: **REVISE** to read 'Mounting: Surface mounted to wall with mechanical fasteners'.
e. Section 2.2, A: **REVISE** to read 'Basis-of-Design Product: Subject to compliance with requirements, provide Vinyl Graphic signs as indicated in specification section 09 7201'. **DELETE** listed manufacturers.
f. Section 2.2, B: **REVISE** to read 'Refer to A812 for Inside Corner Locations at Corridors. Provide vinyl wall graphic with wayfinding. Final text to be confirmed with Owner.'
g. Section 2.2, C: **DELETE** in entirety.
h. Section 2.2, D: **DELETE** in entirety.
i. Section 2.2, E: **DELETE** in entirety.
j. Section 2.2, F: **REVISE** to read 'Mounting: Per Vinyl Graphic manufacturer.'
k. Section 2.3, A: **REVISE** to read 'Concealed mount, mechanical fasteners.'
l. Section 3.1, B, 1: **REVISE** to read 'Shim Plate Mounting: Provide 1/8-inch-thick concealed aluminum shim plates with predrilled and countersunk holes, at locations indicated, and where other mounting methods are not practicable. Attach the plate with fasteners and anchors suitable for secure attachment to the substrate. Attach panel sign units to the plate using the method specified above.'

Section: 10 2800 Toilet and Bath Accessories
Revisions:

a. Section 2.2, A and 2.2, B: **REVISE** items 1 through 3 to read:
    1. Soap Dispenser: Kimberly Clark Professional Cassette Skin Care Dispenser. Owner provided, contractor installed.
    2. Toilet Paper Dispenser: Kimberly Clark JRT Jr. Escort Jumbo Roll Bathroom Tissue Dispenser. Owner provided, contractor installed.
    3. Paper Towel Dispenser: Kimberly Clark MOD Manual Hard Roll Towel Dispenser. Owner provided, contractor installed.

Section 14 2401 Elevator Modernization
Revisions:

a. Section 2.3, B, 7, b: **ADD** Repair and straighten existing frames as necessary to appear as new. Repaint frames at all floors.
b. Section 3.3, A, 3: **ADD** 'Elevator Installer to' *remove existing and install new Pit Light Switch*.

ATTACHMENTS

Sign-In Sheet from 03/12/2018 Pre-Bid Walkthrough and Conference

Specification 01 1300	Time of Completion, Milestones, Phasing or Sequencing Requirements
Specification 07 0150.74	Roofing Repair Membrane
Specification 08 7100	Door Hardware
Specification 10 1423	Panel Signage
Specification 10 2800	Toilet and Bath Accessories
Specification 12 6100	Fixed Audience Seating Repair
Specification 14 2401	Elevator Modernization

Drawing C2.0
Drawing C3.0
Drawing C3.1
Drawing C4.0
Drawing C4.1
Drawing C4.2
Drawing C4.3
Drawing C4.4
Drawing AD011
Drawing AD012
Drawing AD013
Drawing AD014
Drawing AD015
Drawing AD022
Drawing AD023
Drawing AD024
Drawing AD025
Drawing AD026
Drawing AD027
Drawing A102
Drawing A103
Drawing A121
Drawing A122
Drawing A123
Drawing A124
Drawing A125
Drawing A601
Drawing A602
Drawing A807
Drawing A811
Drawing A901
Drawing M201
Drawing M111B
Drawing M112B
Drawing M113B
Drawing M505
Drawing M606

End of Addendum 2

SECTION 07 0150.75 – ROOFING MEMBRANE REPAIR **ADDENDUM 2**

PART 1 - GENERAL

1.1 RELATED DOCUMENTS

A. Drawings and general provisions of the Contract, including General and Supplementary Conditions and Division 01 Specification Sections, apply to this Section.

1.2 SUMMARY

A. This Section includes the following:

1. Built-up roof membrane system.

B. NOT USED

C. Related Sections:

1. Division 06 Section “Miscellaneous Rough Carpentry" for wood nailers, curbs, and blocking.
2. Division 06 Section "Sheathing" for wood-based, structural-use roof deck panels.
3. Division 07 Section "Sheet Metal Flashing and Trim" for metal roof penetration flashings, flashings, and counterflashings.
4. Division 07 Section "Joint Sealants" for joint sealants, joint fillers, and joint preparation.
5. Division 22 Section "Storm Drainage Piping Specialties" for roof drains.

D. Brief Scope of Work – Patching and repair of limited roof areas

1. Installing new curbs and penetrations on existing Roof System:

a. Responsible trade shall provide, locate, and place onto roof new cubs or projections required for project.
b. Roofing Contractor shall demo existing roofing and roof insulation in locations that require new penetration.
c. Existing roof slab shall be removed by General Contractor.
d. The MC, PC, and EC shall be responsible for providing temporary enclosures that are watertight for all roof penetrations and openings.
e. Roofing Contractor shall be responsible to install new built-up roof flashings.
f. Roofing Contractor shall examine insulation layer at areas of roof penetrations and replace any water damaged insulation within 2 feet of penetration.

2. Existing Parapet

   a. Existing parapet and related components to remain.

3. Roof membrane.

   a. Examine Roof membrane for air pockets and lack of adhesion that exceed 5 square feet.
   b. Provide membrane repair in these locations.

1.3 DEFINITIONS

A. Roofing Terminology: Refer to ASTM D 1079 and glossary in NRCA's "The NRCA Roofing and Waterproofing Manual" for definition of terms related to roofing work in this Section.

B. Patching: Removal of a portion of existing membrane roofing system from deck or removal of selected components and accessories from existing membrane roofing system and replacement with similar materials.

C. Remove: Detach items from existing construction and legally dispose of them off-site unless indicated to be removed and reinstalled.

D. Existing to Remain: Existing items of construction that are not indicated to be removed.

1.4 PERFORMANCE REQUIREMENTS

A. General Performance: Installed membrane roofing and base flashings shall withstand specified uplift pressures, thermally induced movement, and exposure to weather without failure due to defective manufacture, fabrication, installation, or other defects in construction. Membrane roofing and base flashings shall remain watertight.

   1. Accelerated Weathering: Roofing system shall withstand 2000 hours of exposure when tested according to ASTM G 152, ASTM G 154, or ASTM G 155.
   2. Impact Resistance: Roofing system shall resist impact damage when tested according to ASTM D 3746 or ASTM D 4272.

B. Material Compatibility: Provide roofing materials that are compatible with one another under conditions of service and application required, as demonstrated by membrane roofing manufacturer based on testing and field experience.

C. Flashings: Comply with requirements of Division 07 Sections “Sheet Metal Flashing and Trim” and “Manufactured Roof Specialties.” Provide base flashings, perimeter flashings, detail flashings and component materials that comply with requirements and recommendations of the following:

   1. FM Global 1-49: Loss Prevention Data Sheet for Perimeter Flashings.

2. FM Global 1-29: Loss Prevention Data Sheet for Above Deck Roof Components.
3. NRCA Roofing Manual (Sixth Edition) for construction details and recommendations.
4. SMACNA Architectural Sheet Metal Manual (Seventh Edition) for construction details.

D. UL Fire-Resistance Ratings: As indicated, provide fire-resistance-rated roof assemblies identical to those of assemblies tested for fire resistance per UL 790 Class A by a qualified testing agency. Identify products with appropriate markings of applicable testing agency.

1.5 ACTION SUBMITTALS

A. Roofing Contractor shall supply required information.

B. Product Data: For each type of product indicated.

C. Shop Drawings: For roofing system. Include plans, sections, details, and attachments to other work.

1. MC, PC and EC to provide roof plans locating intended penetrations for coordination.
2. Base flashings and membrane terminations.

   a. Indicate details meet requirements of NRCA and FMG required by this Section.

D. Samples for Verification: For the following products:

1. Walkway pads or rolls.

1.6 INFORMATIONAL SUBMITTALS

A. Contractor's Product Certificate: Submit notarized certificate, indicating products intended for Work of this Section, including product names and numbers and manufacturers' names, with statement indicating that products to be provided meet the requirements of the Contract Documents.

B. Product Test Reports: Based on evaluation of comprehensive tests performed by manufacturer and witnessed by a qualified testing agency, for components of roofing rehabilitation system.

C. Warranties: Unexecuted sample copies of special warranties.

D. Qualification Data: For Installer and Manufacturer.

1. Letter written for this Project indicating manufacturer approval of Installer to apply specified products and provide specified warranty.

1.7 CLOSEOUT SUBMITTALS

A. Maintenance Data: To include in maintenance manuals.

B. Warranties: Executed copies of approved warranty forms.

1.8 QUALITY ASSURANCE

A. Installer Qualifications: An employer of workers trained and certified by manufacturer, including a full-time on-site supervisor with a minimum of five years' experience installing these products as specified, able to communicate verbally with Contractor, Architect, Owner, and employees, and qualified by the manufacturer to install manufacturer's product and furnish warranty of type specified.

1. Provide list of 5 projects utilizing the specified roof system in similar size and scope for inspection with-in 50 miles from the project site location.

   a. Motivation High School, 5900 Baltimore Avenue, Philadelphia, PA.

2. Provide an Experience Modification Rate (EMR) of .90 or better for a 3 year average.

B. Manufacturer Qualifications: Approved manufacturer listed in this Section, UL listed, FM approved for roofing systems identical to that specified for this Project, with minimum five years' experience in manufacture of specified products in successful use in similar applications.

1. Approval of Comparable Products: Submit the following in accordance with project substitution requirements, within time allowed for substitution review:

   a. Product data, including certified independent test data indicating compliance with requirements.
   b. Samples of each component.
   c. Sample submittal from similar project.
   d. Project references: Minimum of five installations of specified products not less than five years old, with Owner and Architect contact information.
   e. Sample warranty.

2. Substitutions following award of contract are not allowed except as stipulated in Division 01 General Requirements.
3. Approved manufacturers must meet separate requirements of Submittals Article.

C. Roofing Inspector Qualifications:

1. A technical representative of manufacturer not engaged in the sale of products and experienced in the installation and maintenance of the specified roofing system, qualified to perform roofing observation and inspection specified in Field Quality Control Article, to determine Installer's compliance with the requirements of this Project, and approved by the manufacturer to issue warranty certification. The Roofing Inspector shall be one of the following:

    a. An authorized full-time technical employee of the manufacturer.
    b. As certified as a Registered Roof Observer by the Roof Consultants Institute, approved by the Manufacturer. The following shall be required:

2. Technical Inspector Qualifications:

    a. Contractor shall engage the roofing manufacturer's full time technical inspector to supervise all aspects of the installation of the complete roofing system. The inspector shall be on the jobsite for a full time every day roofing work is being conducted. A full time day is defined as from the time the crew arrives to the time the temporary tie-ins are completed. If the technical inspector is not provided by the roofing system manufacturer, an outside qualified inspector can be employed along with a letter from the roof system manufacturer that they will comply with all decisions from the technical inspector and compliance with outside technical inspector will not affect roof system manufacturer's warranty. Technical Inspector shall have a minimum history of one year inspecting the specified roof system.

3. The manufacturer's technical inspector shall:

    a. Not be a salesperson or have any sales responsibilities.
    b. Must have a minimum of 3 years experience as a roofing Inspector on specified roof system.
    c. Must be an employee of the manufacture for a minimum of three (3) years.
    d. Must have been formally trained by the roofing manufacturer with documentation to prove training. Yearly training updates must be supplied.
    e. Must have received the OSHA 10 Hour Safety Training.
    f. Must have received RRO (Registered Roof Observer) Training and at least one member of the local inspection team must be a RRO in good standing with the Roofing Consulting Institute (RCI). This person will conduct quality control inspections and assure inspections are being properly documented per RRO standards.

4. If the technical inspector is not provided by the roofing system manufacturer, an outside qualified inspector can be employed along with a letter from the roof system manufacturer that they will comply with all decisions from the technical inspector and compliance with outside technical inspector will not affect roof system manufacturer's warranty. The technical inspector shall:

    a. Must not be a salesperson or have any sales responsibilities
    b. Must have a minimum of 10 years experience as a roofing foreman on a roofing crew that installed specified roof systems.

c. Must have a minimum of three (3) years experience inspecting the roof system specified.
d. Must have been formally trained by the roofing manufacturer with documentation to prove training. Yearly training updates must be supplied.
e. Must have completed the OSHA 10 Hour Safety Training Class
f. Must be a RRO (Registered Roof Observer) in good standing with the Roofing Consulting Institute (RCI).

D. Roof inspector shall provide the following on a daily bases - Via fax or email to the Owner, Architect, Roofing Contractor, and roof system manufacturer:

1. A daily report signed by both roofing foreman and the inspector.
2. Provide approximate location of work being installed.
3. Keep a list of visitors to the roof on a daily bases.
4. Conduct safety meeting with the crew on site
5. Help coordinate work with other trades
6. Keep a record copy of specifications and drawings on site.
7. Attends all progress meetings to help point out any area of concern
8. Keeps a record of hot asphalt temperature in the kettle and at point of application.
9. Indicates the number of work days and non work days due to weather listed
10. On days when weather prevents roof work from taking place the inspector shall walk the roof and the inside of the building with the roofing foreman to ensure project is watertight.
11. Still provide a daily report stating why contractor is not on site and if any issues were discover during walk-thru.

E. Preliminary Roofing Conference: Before starting roof deck construction, conduct conference at Philadelphia School District at Motivation High School; 5900 Baltimore Avenue, Philadelphia, PA.

1. Meet with Owner, Architect, Owner's insurer if applicable, testing and inspecting agency representative, roofing Installer, roofing system manufacturer's representative, and installers whose work interfaces with or affects roofing, including installers of roof accessories and roof-mounted equipment.
2. Review methods and procedures related to roofing installation, including manufacturer's written instructions.
3. Review and finalize construction schedule and verify availability of materials, Installer's personnel, equipment, and facilities needed to make progress and avoid delays.
4. Review substrate requirements for conditions and finishes, including flatness and fastening.
5. Review base flashings, special roofing details, roof drainage, roof penetrations, equipment curbs, and condition of other construction that will affect roofing system.
6. Review governing regulations and requirements for insurance and certificates if applicable.

7. Review temporary protection requirements for roofing system during and after installation.
8. Review roof observation and repair procedures after roofing installation.

F. Regular Progress Meetings: Conduct conference at Motivation High School, 5900 Baltimore Avenue, Philadelphia, PA.

1. Shall be scheduled by Roofing Inspector and Owner.

a. Attendance:

1) Roofing Inspector.
2) Roofing contractor / other subcontractors.
3) Representative of Owner
4) Owners Architect
5) Manufacturers Sales Representative.

b. Minimum agenda:

1) Review of work progress.
2) Identification of problems, which impede planned progress.
3) Corrective measures to regain projected schedules.
4) Develop punch list of items requiring correction.

G. Final Inspection: Conduct conference at Motivation High School, 5900 Baltimore Avenue, Philadelphia, PA.

1. Will be scheduled by Roofing Inspector upon job completion.

a. Attendance:

1) Roofing Inspector.
2) Roofing contractor / other subcontractors.
3) Representative of Owner
4) Owners Architect
5) Manufacturers Sales Representative.

b. Minimum agenda:

1) Walkover inspection.
2) Identification of problems, which may impede issuance of warranty.

H. Manufacturer Qualifications: Approved manufacturer listed in this Section, with minimum five years' experience in manufacture of specified products in successful use in similar applications.

1.9 DELIVERY, STORAGE, AND HANDLING

A. Deliver roofing materials to Project site in original containers with seals unbroken and labeled with manufacturer's name, product brand name and type, date of manufacture, approval or listing agency markings, and directions for storing and mixing with other components.

B. Store liquid materials in their original undamaged containers in a clean, dry, protected location and within the temperature range required by roofing system manufacturer. Protect stored liquid material from direct sunlight.

1. Discard and legally dispose of liquid material that cannot be applied within its stated shelf life.

C. Handle and store roofing materials and place equipment in a manner to avoid permanent deflection of deck.

1.10 PROJECT CONDITIONS

A. Weather Limitations: Proceed with installation only when existing and forecasted weather conditions permit roofing system to be installed according to manufacturer's written instructions and warranty requirements.

B. Daily Protection: Coordinate installation of roofing so insulation and other components of roofing system not permanently exposed are not subjected to precipitation or left uncovered at the end of the workday or when rain is forecast.

1. Provide tie-offs at end of each day's work to cover exposed roofing and insulation with a course of roofing sheet securely in place with joints and edges sealed.
2. Complete terminations and base flashings and provide temporary seals to prevent water from entering completed sections of roofing.
3. Remove temporary plugs from roof drains at end of each day.
4. Remove and discard temporary seals before beginning work on adjoining roofing.

C. During the construction period, the Roofing Contractor shall, on a daily basis, place all of his waste materials and "non-broomable" debris into containers.

D. Upon completion of the Work and before acceptance and final payment is made, the work shall be cleaned of all rubbish, excess materials, false Work, temporary structures and equipment, and all of the Work shall be left in a neat, presentable condition, satisfactory to the Owner. This work shall be consider incidental to the overall project and no additional compensation will be allowed.

E. Protect building to be rehabilitated, adjacent buildings, walkways, site improvements, exterior plantings, and landscaping from damage or soiling from rehabilitation operations.

F. Maintain access to existing walkways, corridors, and other adjacent occupied or used facilities.

1.11 WARRANTY

A. Requirements:

1. Qualified Installer Warranty Requirement: Installer must meet requirements of Quality Assurance Article.
2. Installation Inspection Warranty Requirement: By Roofing Inspector in accordance with requirements of Part 3 Field Quality Control Article.

B. Installer's Warranty: Submit roofing Installer's warranty, on warranty form at end of this Section, signed by Installer, covering the Work of this Section and related Sections indicated above, including all components of membrane roofing such as single ply roofing membrane, base flashing, roof insulation, fasteners, cover boards, substrate boards, vapor retarders, roof pavers, and walkway products, for the following warranty period:

1. Warranty Period: Three years from date of Substantial Completion.

PART 2 - PRODUCTS

2.1 MANUFACTURERS

A. Manufacturers: Subject to compliance with requirements, provide products to match existing roofing system

B. Source Limitations: Obtain components for roofing system from same manufacturer as built-up roofing or manufacturer approved by built-up roofing manufacturer.

2.2 PERFORMANCE REQUIREMENTS

A. General Performance: Installed built-up roofing and base flashings shall withstand specified uplift pressures, thermally induced movement, and exposure to weather without failure due to defective manufacture, fabrication, installation, or other defects in construction. Built-up roofing and base flashings shall remain watertight.

1. Accelerated Weathering: Roofing system shall withstand 2000 hours of exposure when tested according to ASTM G 152, ASTM G 154, or ASTM G 155.
2. Impact Resistance: Roofing system shall resist impact damage when tested according to ASTM D 3746 or ASTM D 4272.

B. Material Compatibility: Provide roofing materials that are compatible with one another under conditions of service and application required, as demonstrated by roofing manufacturer based on testing and field experience.

C. Exterior Fire-Test Exposure: ASTM E 108, Class A for application and roof slopes indicated, as determined by testing identical membrane roofing materials by a qualified testing agency. Materials shall be identified with appropriate markings of applicable testing agency.

2.3 BUILT-UP ROOFING

A. Ply Sheet: ASTM D 2178, Type IV or VI, asphalt-impregnated, glass-fiber felt. Examine existing substrate and match or provide compatible ply sheet.

B. Cap Sheet: ASTM D 3909, asphalt-impregnated and -coated, glass-fiber cap sheet, with white coarse mineral-granule top surfacing and fine mineral surfacing on bottom surface.

2.4 FLASHING MATERIALS

A. Backer Sheet: ASTM D 2178, Type IV or VI, asphalt-impregnated, glass-fiber felt. Examine existing substrate and match or provide compatible backer sheet.

B. Flashing Sheet: ASTM D 6164, Type I or II, polyester-reinforced, SBS-modified asphalt sheet; granular surfaced; suitable for application method specified and as follows:

1. Granule Color: match existing.

C. Glass-Fiber Fabric: Woven glass cloth, treated with asphalt, complying with ASTM D 1668, Type I.

2.5 ASPHALT MATERIALS

A. Asphalt Primer: ASTM D 41.

B. Roofing Asphalt: ASTM D 312, Type recommended by built-up roofing system manufacturer to match existing.

2.6 AUXILIARY ROOFING MEMBRANE MATERIALS

A. General: Auxiliary materials recommended by roofing system manufacturer for intended use and compatible with built-up roofing.

B. Asphalt Roofing Cement: ASTM D 4586, asbestos free, of consistency required by roofing system manufacturer for application.

C. Cold-Applied Adhesive: Roofing system manufacturer's standard asphalt-based, one- or two-part, asbestos-free, cold-applied adhesive specially formulated for compatibility and use with built-up roofing base flashings.

D. Mastic Sealant: Polyisobutylene, plain or modified bitumen, nonhardening, nonmigrating, nonskinning, and nondrying.

E. Fasteners: Factory-coated steel fasteners and metal or plastic plates meeting corrosion-resistance provisions in FM 4470; designed for fastening roofing membrane components to substrate; tested by manufacturer for required pullout strength; and acceptable to roofing system manufacturer.

F. Metal Flashing Sheet: Metal flashing sheet is specified in Division 7 Section "Sheet Metal Flashing and Trim."

G. Aggregate Surfacing: ASTM D 1863, No. 6 or No. 67, clean, dry, opaque, water-worn gravel or crushed stone, free of sharp edges.

H. Separator Sheet: Polyethylene sheet, 4 mils (0.1 mm) thick, minimum.

I. Miscellaneous Accessories: Provide miscellaneous accessories recommended by roofing system manufacturer.

2.7 MATERIALS, GENERAL

A. General: Rehabilitation materials recommended by roofing system manufacturer for intended use and compatible with components of existing membrane roofing system.

PART 3 - EXECUTION

3.1 EXAMINATION

A. Examine existing roofing substrates, with Installer present, for compliance with requirements and for other conditions affecting application and performance of roof coatings

1. For the record, prepare written report, endorsed by Installer, listing conditions detrimental to performance.
2. Verify compatibility with and suitability of substrates.
3. Verify that substrates are visibly dry and free of moisture.
4. Verify that roofing membrane surfaces have adequately aged to enable proper bond with base coat.
5. Verify that roofing membrane is free of blisters, splits, open laps, indications of shrinkage, and puncture damage or other indications of impending roof system failure.
6. Application of coatings indicates acceptance of surfaces and conditions.

3.2 PREPARATION

A. Protect existing roofing system and adjacent portions of building and building equipment.

1. Comply with warranty requirements of existing roof membrane manufacturer.
2. Limit traffic and material storage to areas of existing roofing membrane that have been protected.
3. Maintain temporary protection and leave in place until replacement roofing has been completed.

B. Maintain roof drains in functioning condition to ensure roof drainage at end of each workday. Prevent debris from entering or blocking roof drains and conductors. Use roof-drain plugs specifically designed for this purpose. Remove roof-drain plugs at end of each workday, when no work is taking place, or when rain is forecast.

1. Do not permit water to enter into or under existing membrane roofing system components that are to remain.

C. Membrane Surface Preparation:

1. Using a 2,500 PSI power washer, with or without a rotating head, wash all areas to loosen and remove dirt from the surface of the membrane.
2. If dirt still resides on the surface of the roof, use a mild, biodegradable detergent and scrub pads to further loosen the dirt and lift it from the TPA surface. Ensure that the detergent used complies with local codes and that, if run-off is prohibited, that the water is captured and properly disposed of.
3. If detergent is used, rinse the surface of the roof to remove residual detergent. Again, ensure that all runoff has been captured if necessary in your area.
4. For areas that may still have residual and hard to remove contaminants on the surface, wipe areas with acetone and WHITE RAGS ONLY, then rinse.

3.3 INSTALLATION, GENERAL

A. Install roofing system in accordance with manufacturer's recommendations.

B. Install built-up roofing, base flashings, and component materials in compliance with requirements in FMG 4450 and FMG 4470 as part of a membrane roofing system as listed in FMG's "Approval Guide" for fire/windstorm classification indicated. Comply with recommendations in FMG Loss Prevention Data Sheet 1-49.

3.4 ROOFING MEMBRANE INSTALLATION

A. Loosely lay one course of sheathing paper, lapping edges and ends a minimum of 2 inches (50 mm) and 6 inches (150 mm), respectively.

B. Install one lapped course of base sheet, extending sheet over and terminating beyond cants. Attach base sheet as follows:

1. Mechanically fasten to substrate.
2. Spot- or strip-mop to substrate with hot roofing asphalt.
3. Adhere to substrate in a solid mopping of hot roofing asphalt.

C. Install number of ply sheets to match existing roof installation starting at low point of roofing system. Align ply sheets without stretching. Shingle side laps of ply sheets uniformly to achieve required number of plies throughout thickness of roofing membrane. Shingle in direction to shed water. Extend ply sheets over and terminate beyond cants.

1. Embed each ply sheet in a solid mopping of hot roofing asphalt applied at rate required by roofing system manufacturer, to form a uniform membrane without ply sheets touching.

D. Cap Sheet: Install lapped granulated cap sheet starting at low point of roofing system. Offset laps from laps of preceding ply sheets and align cap sheet without stretching. Lap in direction to shed water. Extend cap sheet over and terminate beyond cants.

1. Embed cap sheet in a solid mopping of hot roofing asphalt applied at rate required by roofing system manufacturer.

E. Aggregate Surfacing: Promptly after installing and testing roofing membrane, base flashing, and stripping, flood-coat roof surface with 60 lb/100 sq. ft. (3 kg/sq. m) of hot roofing asphalt. While flood coat is hot and fluid, cast the following average weight of aggregate in a uniform course:

1. Aggregate Weight: 400 lb/100 sq. ft.
2. If aggregate surfacing is delayed, promptly apply glaze coat of hot roofing asphalt at a rate of 10 lb/100 sq. ft. (0.5 kg/sq. m).

F. Glaze-coat roofing membrane surface with hot roofing asphalt applied at a rate of 10 to 15 lb/100 sq. ft. (0.5 to 0.73 kg/sq. m).

G. Flood-coat roofing membrane surface of protected membrane roofing with hot roofing asphalt applied at a rate of 70 lb/100 sq. ft. (3.5 kg/sq. m).

3.5 FIELD QUALITY CONTROL

A. Roofing Inspector**:** Contractor shall engage a qualified roofing inspector for full-time days on site to perform roof tests and inspections and to prepare start up, interim, and final reports. Roofing Inspector's quality assurance inspections shall comply with criteria established in Quality Assurance as noted above.

B. Final Roof Inspection: Arrange for roofing system manufacturer's technical personnel to inspect roofing installation on completion.

C. Repair or remove and replace components of built-up roofing system where inspections indicate that they do not comply with specified requirements.

D. Additional inspections, at Contractor's expense, will be performed to determine compliance of replaced or additional work with specified requirements.

3.6 PROTECTING AND CLEANING

A. Protect built-up roofing system from damage and wear during remainder of construction period. When remaining construction will not affect or endanger roofing, inspect roofing for deterioration and damage, describing its nature and extent in a written report, with copies to Architect and Owner.

B. Correct deficiencies in or remove built-up roofing system that does not comply with requirements; repair substrates; and repair or reinstall membrane roofing system to a condition free of damage and deterioration at time of Substantial Completion and according to warranty requirements.

C. Clean overspray and spillage from adjacent construction using cleaning agents and procedures recommended by manufacturer of affected construction.

END OF SECTION 07 0150.74

SECTION 12 6100 – FIXED AUDIENCE SEATING REPAIR **ADDENDUM 3**

PART 1 - GENERAL SPECIFICATIONS

1.1 SUMMARY:

A. Repair and Replacement of fixed audience seating components.

B. Remove tablet arms.

C. Repair defective or missing floor anchors.

D. Replace seat lift springs.

E. New accessible seating locations.

1.2 SUBMITTALS:

A. Product data for each component indicated to include construction details, material descriptions.

B. Seating layout (shop drawings) developed from the contract drawings which show existing chair layout with new handicap spaces. Identify chair locations requiring repair.

C. Samples for verification & finish selection to include:

1. Finish selections to be match existing.

1.3 PROJECT CONDITIONS:

A. Field Measurements:
Take field measurements to verify or supplement dimensions indicated on contract drawings prior to manufacturing.

1.4 PROJECT COORDINATION:

A. Do not deliver or install seating until space is free of lifts and/or scaffolding used by other trades which may interfere with installation and/or damage seating.

B. Coordinate concrete requirements needed for proper installation.

1.6 WARRANTY:

A. Provide a manufacturer's warranty covering the material and workmanship for the specified warranty period from date of final acceptance.

B. Warranty Periods:

1. Structural Components: five years.

2. Operating Mechanisms: five years.

3. Plastic, Wood and Painted Components: five years.

PART 2 - PRODUCTS

2.1 MATERIALS AND FINISHES:

A. Steel shall meet requirements for ASTM A 36/A 36M plates, shapes, and bars; ASTM A 513 mechanical tubing; ASTM A 1008/A 1008M cold-rolled sheet; and ASTM A 1011 hot-rolled sheet and strip.

B. Cast Iron shall meet requirements for ASTM A 48/A 48M, Class 25, gray iron castings free of blow holes and hot checks with parting lines ground smooth.

C. Cast Aluminum shall meet requirements for ASTM B 85 aluminum-alloy die castings.

D. All exposed metal parts shall be powder coated with a hybrid thermosetting powder coat finish. The powder coat finish shall be applied by electrostatic means to a thickness of 2 - 5 mils, and shall provide a durable coating having a 2H Pencil hardness. Prior to powder coating, metal parts shall be treated with a three-stage non-acidic, bonderizing process for superior finish adhesion, and after coating shall be oven baked to cause proper flow of the epoxy powder to result in a smooth, durable finish. Manufacturer's standard color range shall be used.

E. Medium-density fiberboard shall meet requirements for ANSI A208.2, Grade MD, made with binder containing no urea formaldehyde.

F. Concealed plywood shall meet requirements for HPVA HP-1 hardwood plywood.

G. Exposed plywood shall meet requirements for HPVA HP-1, Face Grade A, hardwood veneer core with color-matched hardwood-veneer faces, made with adhesive containing no urea formaldehyde.

H. Hardwood lumber and veneer faces shall be maple selected to be free of visible defects. Exposed wood shall be sanded smooth and stained to color selected with low-VOC water-based stain and top coat to provide with a high quality finish. Color to be chosen from manufacturer’s standard offering.

2.2 FIXED AUDIENCE SEATING

A. Manufacturers Criteria

1. SIMILAR PROJECTS: Approved Manufacturer shall furnish list of at least 5 similar school projects with chairs installed for a minimum of 5 years.

2. MANUFACTURER QUALIFICATIONS: Manufacturer shall have been in business for a minimum of 15 years under same ownership with at least 15 years of experience in manufacturing auditorium type seating similar to specifications.

B. Existing Seating was manufactured by the Irwin Seating Company. Basis of design parts and replacement to be provided by the Essjay Co., LLC.

1. Scope requirements outlined herein.

a. GC to replace 187 seats w/ delamination scattered throughout auditorium.
b. GC to replace 23 backs w/ delamination scattered throughout auditorium.
c. GC to remove existing tablet arms and turn over to school for future attic stock. Note: There are approximately 375 T/A's on every other center standard.
d. GC to repair existing defective or missing floor anchors (approx. 25).
e. Inspect chairs for loose or missing hardware.
f. Replace up to 100 broken seat lift seat springs.
g. GC to create 8 Handicap spaces by removing 16 chairs. Move aisle standards inboard and reattach to existing chairs. Install new aisle standard anchors.
h. Dispose of broken parts in dumpster.
i. GC to install 8 new Irwin ADA transfer arm standards.
j. GC to remove existing number plates and brads attaching them to plywood backs. Note: 2/3 are already missing.
k. GC to replace broken standards (approx. 5).
l. GC to replace damaged armrests (approx. 15).

C. Accessible Seating:

1. Shall be designated on the seating layout drawings and designed to allow an individual to transfer from a wheelchair to the theatre chair. The aisle standard shall be equipped with an armrest capable of lifting to a position parallel with the support column, opening sideways access to the seat. Aisle standards so equipped shall be provided with a label, displaying an easily recognizable "handicapped" symbol. Decorative requirements of aisle standards are waived for the handicapped access standards.

PART 3: EXECUTION

3.1 EXAMINATION

A. Prior to layout and installation examine floors, risers, and other adjacent work and conditions, with Installer present, for compliance with requirements and other

conditions affecting performance of the work including, but not limited to, plumb of riser faces and concrete conditions.

B. Proceed with installation only after unsatisfactory conditions have been corrected.

3.2 INSTALLATION

A. Install seating components in locations indicated and fastened securely to substrates according to manufacturer's written installation instructions.

B. Use installation methods and fasteners that produce fixed audience seating assemblies with individual chairs capable of supporting an evenly distributed 600-lb static load applied 3” from front edge of the seat without failure or other conditions that might impair the chair's usefulness.

C. Repair seating so moving components operate smoothly and quietly.

3.3 ADJUSTING

A. Adjust chair backs so that they are properly aligned with each other.

B. Adjust self-rising seat mechanisms so seats in each row are aligned when in upright position.

C. Verify that all components and devices are operating properly.

D. Repair minor abrasions and imperfections in finishes with coating that matches factory-applied finish.

END OF SECTION 12 6100

THIS PAGE LEFT INTENTIONALLY BLANK

SECTION 08 7100 - DOOR HARDWARE **ADDENDUM 2**

PART 1 GENERAL

1.1 SUMMARY

A. Section Includes:

1. Hardware for swinging Aluminum, Hollow Metal and Wood Door Openings.

B. Related Sections:

1. Section GC-4.23 – See General Conditions GC-4.23 Substitutions or Equal for Substitution Requirements.
2. Section 06 20 00 – Finish Carpentry
3. Section 08 11 13 – Hollow Metal Doors and Frames
4. Section 08 14 16 – Flush Wood Doors
5. Section 08 41 13 – Aluminum – Framed Entrances and Storefronts
6. Section 26 05 19 – Low Voltage Electrical Power Conductors and Cables

1.2 REFERENCES

A. Use the following references to properly detail, schedule, furnish and install finish hardware items.

1. NFPA 80 – Standard for Fire Doors and Other Opening Protectives (2007)
2. DHI Installation Guide for Doors and Hardware (1984)
3. DHI Sequence and Format for the Hardware Schedule (1996)
4. ANSI/BHMA A156.4 – Door Controls – Closers (2013)
5. ANSI/BHMA A156.2 – Bored and preassembled Locks and Latches (2011)
6. ANSI/BHMA A156.13 – Mortise Locks and Latches Series 1000 (2012)
7. ANSI/BHMA A156.18 – Materials and Finishes (2012)

1.3 SUBMITTALS

A. Schedule:

1. Submit the final door hardware schedule at earliest possible date, particularly where approval of door hardware schedule must precede fabrication of other work that is critical to the project construction schedule. Include product data, samples, shop drawings of other work affected by door hardware, and other information essential to the coordinated review of the door hardware schedule.
2. Provide hardware schedule in vertical format on 8-1/2-inch by 11-inch paper or electronic format. Conform to DHI publication Sequence and Format for Hardware Schedule using Architect's door numbers and hardware set numbers.
3. Provide elevation drawings for openings with electrical hardware and access control devices with each hardware schedule. Include illustration of opening, operational description, electrified hardware components, legend, approximate mounting location and size of enclosures, size and quantity of conductors, facility name and date.

B. Product Data: Provide one set of manufacturer's catalog and technical data for each hardware item used, highlighting design, function, fasteners, accessories, and options to facilitate review with each hardware schedule submitted.

C. Templates: Provide two sets of manufacturer's templating information for mortised and template hardware upon receipt of approved hardware schedule to the door and frame supplier(s). Include requirements for internal reinforcements required for surface mounted hardware.

D. Wiring Diagrams:

1. Three sets point-to-point diagrams specially developed for each opening that requires electrical hardware, with hardware delivery to jobsite. Reference elevation drawings submitted with hardware schedule using Architect's opening numbers.

2. Three sets riser diagrams for openings requiring power supplies or access control. Include placement of power supplies, distance of wire runs from power supply, cable quantity and number and gauges of wires.

E. Keying Schedule: Arrange meeting with Owner, Architect and finish hardware supplier to determine keying requirements immediately upon receipt of finish hardware schedule.

1. After a keying meeting with the owner has taken place, prepare a separate keying schedule detailing final instructions. Submit the keying schedule in electronic format. Schedule should include keying system explanation, door numbers, key set symbols, hardware set numbers, and special instructions. Schedule should also include:

a. FUNCTION OF BUILDING, PURPOSE OF EACH AREA AND DEGREE OF SECURITY REQUIRED
b. PLANS FOR EXISTING AND FUTURE KEY SYSTEM EXPANSION
c. REQUIREMENTS FOR KEY CONTROL STORAGE
d. INSTALLATION OF PERMANENT KEYS & CYLINDER CORES
e. ADDRESS AND REQUIREMENTS FOR DELIVERY OF KEYS. OWNER MUST APPROVE KEYING SCHEDULE PRIOR TO THE ORDERING OF PERMANENT CYLINDERS/CORES.

F. Product Test Reports: Indicating compliance with cycle testing requirements, based on evaluation of comprehensive tests performed by manufacturer and witnessed by a qualified independent testing agency.

1.4 CLOSEOUT SUBMITTALS

A. Furnish operations and maintenance manual is accordance with Section 01 78 28 – Operations and Maintenance Data and as follows:

1. Furnish one copy of manual at date of Substantial Completion in a 2-1/2-inch thick binder labeled with project information, date and name and contact information for the hardware supplier.
2. Include in manual:

a. Copy of approved hardware schedule, including door numbers and locations. Highlight fire rated door to aid in annual fire door inspection.
b. Copy of approved keying schedule.
c. Catalog data for each product.
d. As-installed “wiring diagrams” for each opening connected to power.
e. Parts list for locksets, exit devices, and door closers.
f. Installation templates and instructions.
g. Warranty information.
h. Name, address, and phone number of local representatives for each manufacturer.

1.5 MAINTENANCE MATERIAL SUBMITTALS

A. Extra Materials:

1. Screws and Fasteners: Fifty of each screw and fastener required for general maintenance of hinges, locks, closers, exit devices, and sealing systems.

2. Deliver to Owner remaining finish hardware fasteners and special installation tools upon completion of Project.

1.6 QUALITY ASSURANCE

A. Supplier:

1. Furnish hardware from recognized supplier who has warehousing facility within 100 miles of project location, and who has actively supplied hardware for similar projects in the vicinity for a minimum of five years.
2. Supplier shall employ an Architectural Hardware Consultant (AHC), as certified by Door and Hardware Institute, on staff full time to administer and supervise project.

B. Source Limitations: Obtain each type and variety of hardware as specified in this section from a single source unless otherwise indicated.

C. Installer: Install hardware using installers who have actively installed commercial door hardware for a minimum of five years, and are familiar with hardware installation of type required on this Project.

D. Pre-Installation Meeting:

1. Prior to installation of hardware, arrange for manufacturer’s representatives of locksets, door closers, and exit devices to hold a jobsite meeting to instruct the installing personnel on the proper installation and adjustment of their products.

a. Training will include the use of installation manuals, hardware schedules, templates, and physical product samples as required.
b. Inspect and discuss electrical roughing-in, power supply connections and other preparatory work performed by other trades.

c. Review sequence of operation narratives for each unique access-controlled opening.
d. Review and finalize construction schedule and verify availability of materials.
e. Review the required inspecting, testing, commissioning and demonstration procedures.

2. Send a letter of compliance, indicating when this meeting was held, and who was in attendance, to the Architect and Owner.

E. Fire Rated Door Openings:

1. Comply with NFPA 80.
2. Furnish nationally recognized testing agency label or stamp on hardware for labeled openings.
3. Only labeled locks or latches or fire exit hardware can be used on fire rated openings.
4. Where UL requirements conflict with Drawings or Specifications, furnish hardware conforming to the UL requirements.

1.7 DELIVERY, STORAGE, AND HANDLING

A. Delivery:

1. Jointly check in hardware, upon delivery to jobsite, against approved hardware schedule with hardware supplier. Record shortage or damage and replace or repair as necessary.
2. Deliver hardware to be installed during fabrication of doors and frames, to manufacturer.

B. Storage:

1. Store hardware in a secure, dry, temperature controlled room on shelving to protect against loss, theft and damage.
2. Store items too long for shelving on pallet, off the floor.

C. Marking and Packaging:

1. Deliver hardware to jobsite in manufacturer's original packaging marked to correspond with approved hardware schedule with Architect's door numbers and hardware sets.
2. Mark all locksets, exit devices, cylinders, auxiliary hardware and key switches with keyset symbol.
3. Replace any wet or damaged packaging with new.

1.8 WARRANTY

A. Furnish warranties in accordance with Warranty Section – Warranties. Extended or limited warranties shall be as follows:

1. Grade 1 Heavy Duty Cylindrical Locksets: 10 Years
2. Door Closers: 30 Years.
3. Exit Devices: 5 Years

PART 2 PRODUCTS

2.1 MANUFACTURERS

A. The following manufacturers' were used in the hardware sets.

1. Butt Hinges	Stanley	ST
2. Continuous Hinges	Stanley	ST
3. Locks and Latchsets	Best	BE
4. Cylinders and Cores	Corbin Russwin	CR
5. Surface Closers	LCN	LC
6. Exit Devices	Precision	PR
7. Overhead Stop/Holders	ABH	AB
8. Door Pulls	Trimco	TR
9. Flushbolts	Trimco	TR
10. Protection Plates	Trimco	TR
11. Wall/Floor Stops	Trimco	TR
12. Thresholds and Gasketing	National Guard	NA
13. Silencers	Trimco	TR

B. Submit requests for substitution in accordance with Division 1, General Conditions (GC-4.23).

1. Provide catalog data, with product information highlighted or bubbled to facilitate review. Physical sample of proposed product must be submitted for review. Product must meet or exceed level or design intended and/or function established by specified products. Warranty must meet or exceed requirements stated in this section.

2.2 MATERIALS

A. Screws and Fasteners:

1. Provide manufacturer's recommended fasteners of proper type, material and finish.
2. Provide self-tapping screws for sweeps and stop applied weatherstripping.
3. Utilize through-bolts for the attachment of door closers and exit devices on non-reinforced doors only. Finish: match door face.
4. Exposed screw heads: Torx Security with Security Pin, Spanner Head or approved security type head.

   A. Follow specified manufacturers option code for security fasteners to be supplied with products.

C. Hinges:

1. Type:

   a. Five-knuckle, full mortise, ball bearing.
   b. Furnish heavy weight hinges on heavy doors and doors expected to have high frequency use.

2. Quantity:

   a. One pair of hinges for all doors up to 5 feet high. Furnish one additional hinge for every 2'-6" in height or fraction thereof.
   b. Four hinges at dutch doors up to 7'-6" in height.

3. Size:

   a. For 1-3/4-inch thick doors up to 3 feet wide: 4 ½-inches high
   b. For 1-3/4-inch thick doors over 3 feet wide: 5-inches high
   c. For all doors over 1-3/4-inches thick: 5-inches high
   d. Size in width shall minimally clear door trim.

4. Application:

   a. NRP (non-removable pin) at exterior doors and reverse bevel doors with locking hardware.
   b. Electric hinges: have sufficient number of concealed wires to accommodate electrical function of hardware. Furnish junction box and mortar shield.

5. Acceptable manufacturers and types:

Type	Stanley	McKinney
Standard Weight	FBB179	TA2714
Heavy Weight	FBB168	T4A3786
Heavy Weight	FBB199	T4A3386
Standard Weight	FBB112 / 173	TA2372 / TA2772
Heavy Weight	FBB113 / 163	T4A3382 / T4A3782

D. Continuous Hinges:

1. Configuration appropriate for type, inset, and thickness of door. Coordinate with door manufacturer.
2. Meet UL fire label listing requirements at UL rated openings. Include fire pins as required by manufacturer.
3. Acceptable manufacturers and types:

Door Type	Stanley	ABH	Select
Aluminum	661HD	A110HD	SL11HD
HM / WD	662HD	A240HD	SL24HD
HM / WD	663HD	A540HD	SL54HD
HM / WD	664HD	A571HD	
HM/WD	665HD	A210HD	SL21HD

E. Door Bolts:

1. Flushbolts:

   a. Manual Flushbolts: Two for inactive leaf of locked pairs of doors at non-occupied rooms.
   b. Self-Latching Flushbolts: One pair for inactive leaf at pairs of doors where inactive leaf is not required for egress.
   c. Automatic Flushbolts: One pair at fire rated doors, and occupied rooms required for egress.
   d. Acceptable manufacturers and types:

Bolt/Door Type	Trimco	Burns	ABH
Manual Metal	3917	590	1855
Manual Wood	3913	591	1857
Automatic Metal	3810	7842	1860
Automatic Wood	3815	7942	1862
Self-Latching Metal	3820 x 3810	7845	1863
Self-Latching Wood	3825 x 3815	7945	1864

F. Locksets:

1. Mortise Locks:

   a. Conform to ANSI/BHMA A156.13, Series 1000 Operational Grade 1.
   b. Latchbolt with appropriate throw for fire rated doors and pairs of doors in accordance with manufacturers listing.
   c. Lock functions as specified in hardware schedule.
   d. Electrical functions as specified in hardware schedule, 24VDC.
   e. Lever design: 15J
   f. Backset: 2-3/4-inch
   g. Strike single door: ANSI 4-7/8-inch with proper lip length to minimally clear trim.
   h. Strike pair of doors: flat lip strike sized to fit flush with face of door.
   i. Furnish wrought strike box.
   j. Acceptable manufacturers and types:

Best	Corbin Russwin
45H Series	ML2000 Series

2. Cylindrical Locks:

   a. Conform to ANSI/BHMA A156.2, Series 4000 Operational Grade 1.
   b. Latchbolt with appropriate throw for fire rated doors and pairs of doors in accordance with manufacturers listing.
   c. Lock functions as specified in hardware schedule.
   d. Lever design: 15D
   e. Backset: 2-3/4-inch
   f. Strike single door: ANSI 4-7/8-inch with proper lip length to minimally clear trim.
   g. Strike pair of doors: flat lip strike sized to fit flush with face of door.
   h. Furnish wrought strike box.
   i. Acceptable manufacturers and types:

Best	Corbin Russwin
9K Series x LM	CL3300 Series

3. Cylinders:
   a. Provide mortise and rim cylinders and cores from specified manufacturer so as to maintain integrity of owner's existing key system.
   b. Appropriate cam and blocking rings for proper installation

G. Keys & Keying

1. Cylinders: 7-pin, Interchangeable Core and keyed into a Corbin Russwin Pyramid factory registered Masterkey System.
2. No construction cores are to be provided.
3. Permanent Keys and Cores: Prepare permanent cores and keys in accordance with keying schedule. Provide Masterkeys and other Security Keys.
4. Install permanent cores in new hardware as each opening / area of the project is completed and immediately turn keys over to Philadelphia School District Building Engineer.
5. Furnish keys in the following quantities:
   a. 4 each Masterkeys per new Masterkey set.
   b. 3 each Change keys each keyed core.
   c. 3 each Control keys.
6. BEST Access Solutions equipped doors: Existing BEST cores are to be turned over to the Philadelphia School District Building Engineer as soon as construction in those specific areas begins. Those same cores are to be reinstalled in the new lockset in the opening from which each core was removed. All keys to be turned over to the Philadelphia School District Building Engineer

H. Exit Devices:

1. UL-listed for fire at fire door assemblies, and UL listed for panic at non-rated door assemblies.
2. Size exit devices to proper door width and height.
3. Stainless Steel deadlocking ¾ -inch throw latch bolt.
4. LBR (less bottom rod) where scheduled to eliminate use of floor mounted strikes.
5. Cylinders for exit devices with cylinder dogging or locking trim.
6. Electrical functions as scheduled in sets. Provide power supply and power transfer from same manufacturer as electrified exit device.
7. Strike: as recommended by manufacturer.
8. Lever design: To match lockset trim.
9. Acceptable manufacturers and types:

Precision	Von Duprin
Apex 2000 Series	98 Series

I. Surface Door Closers:

1. Conform to ANSI/BHMA A156.4 Grade 1.
2. Heavy duty high silicon aluminum alloy or cast iron body closers.
3. Furnish manufacturers recommended size, arms and configuration for door and frame application required.

4. Furnish brackets, spacers, support shoes, and plates for complete and proper installation.
5. DA (delayed-action) at toilet room doors and as scheduled.
6. All closers to have full metal covers.
7. Acceptable manufacturers and types:

LCN	Norton
4040XP Series	7500 Series

J. Overhead Door Stop:

1. Provide overhead stop or overhead stop/holder for interior doors as specified. Provide overhead stop for interior doors and at any door that swings more than 140 degrees before striking a wall, open against equipment, casework, sidelights, and/or where conditions do not allow a wall stop or a floor stop presents a tripping hazard.
2. Where overhead holders are specified provide friction type at doors without a closer and positive type at doors with a closer.
3. Acceptable manufacturers:

ABH	Rixson	Glynn Johnson
9020 Series	9 Series	90 Series

K. Door Trim:

1. Provide push plates 6 inches wide x 16 inches high x 0.050 inch thick and beveled 4 edges. Where width of door stile prevents use of 6 inches wide plate, adjust width to fit.
2. Provide pull plates 4 inches wide x 16 inches high x 0.050 inch thick, beveled 4 edges, and prepped for pull. Where width of door stile prevents use of 4 inches wide plate, adjust width to fit.
3. Acceptable manufacturers:

Type	Trimco	Burns	Rockwood
Pull Plate	1014-3B	5421B	126 x 70C
Push Plate	1001-9	56	75E
Anti Vandal Pull	1196 Series	N/A	

L. Protection Plates:

1. Where bottom rail allows, furnish 10-inch high kick plates and 10-inch high mop plates.
2. Material: 0.050-inch thick stainless steel plates with four beveled edges.
3. Countersink screw heads at wood doors.
4. Width: 2-inch less door width on stop (push) side and 1-inch less door width on face (pull) side.
5. Acceptable manufacturer and types:

Trimco	Burns	Rockwood
K0050	KP	K1050

M. Door Stops:

1. Convex, cast, wall stops.
2. Furnish fastener suitable for wall condition.

3. Provide wedge type stop for doors with push/pulls.
4. Where wall stops are inappropriate provide universal dome type floor stops.
5. Acceptable manufacturers and types:

Type	Trimco	Burns	Rockwood
Wall Stop	1270CX	560	400
Wedge Stop	1298	526	487
Floor Stop	1211	521	441H

N. Door Position Switch:

1. Provide magnetic switch, concealed three-quarter inch round, Single Pole Double Throw (SPDT) .250mA@ 30VDC for door status monitoring.
2. Acceptable manufacturer's and type:

SDC	Sentrol	Securitron
MC-4	1076C	DPS

O. Thresholds and Gasketing:

1. Thresholds:
   a. Returned closed ends at openings where threshold extends beyond frame face.
   b. Bumper threshold with silicone insert where scheduled.
   c. Acceptable manufacturers and types:

Type	National Guard	Pemko
Saddle	513	271
Saddle	425	171
Bumper	896	2005

2. Gasketing:
   a. Rigid jamb weatherstip with replaceable neoprene insert.
   b. Include self-adhesive two-sided tape in addition to manufacturer's standard fastener.
   c. Meeting-stile gasketing required at exterior pairs of doors and doors in smoke partitions.
   d. TPE adhesive fire/smoke gasketing at fire and smoke "S" labeled openings
   e. Door sweep with neoprene insert for exterior out-swing doors.
   f. Acceptable manufacturers and types:

Type	National Guard	Pemko
Rigid	137 NA	296CR
Smoke	5075	S773
Meeting Stile	115 NA	305CN
Door Sweep	200 NA	315CN

P. Silencers:

1. Grey rubber silencers with injector tool.
2. Three silencers at single doors and two silencers at pairs.
3. Acceptable manufacturers and types:

Trimco	Rockwood	Burns
1229A	608	500

2.3 KEY CONTROL

A. Key cabinet: wall mounted with one hook for each lock or cylinder plus fifty extra hooks.

1. One non-removable security tag and one snap-on link duplicate tag per hook.
2. Furnish tools, instructions sheets and accessories required to complete installation.
3. Owner/Owner's representative will place keys in cabinet and complete index card furnished with key system.
4. Acceptable manufacturers:

Lund	Telkee	MMF

2.4 FINISHES

A. Conform to ANSI/BHMA A156.18.

1. Butt Hinges	630	Stainless Steel
2. Locks and Latches	626	Satin Chrome
3. Exit Devices	630	Satin Stainless Steel
4. Door Closers	689	Spray Painted Aluminum
5. Pull Plates	630	Satin Stainless Steel
6. Protection Plates	630	Satin Stainless Steel
7. Stops and Holders	630	Satin Stainless Steel
8. Thresholds/Gasket	AL	Anodized Mil Finished Aluminum

PART 3 EXECUTION

3.1 EXAMINATION

A. Verify doors and frames are plumb, square, level and true and free from defects that would prevent proper installation of finish hardware.

B. Verify power is run to doors requiring electrified hardware.

C. Wash down masonry walls and complete painting and staining of doors and frames prior to installation of hardware.

D. Complete finish flooring at doorways.

E. Correct conditions that inhibit a proper installation before continuing with work.

3.2 INSTALLATION

A. Install hardware in compliance with the DHI publication, Installation Guide for Doors and Hardware.

B. Drill and countersink items not factory prepared for fasteners.

C. Mount closers on room-side of corridor doors, inside of exterior doors, and stair-side of stairway doors. Use necessary arms, brackets, spacers and plates to accommodate auxiliary hardware and special applications.

D. Install fire door assemblies to maintain clearances at door edge to frame and meeting edge of pairs of doors in compliance with NFPA 80, providing 1/8-inch clearance at the hinge edge, lock edge, head and between pairs. Provide maximum 3/4-inch undercut at door bottom. Where panic thresholds are used, undercut door to allow 1/8-inch clearance between door and threshold.

E. Trim, cut, and notch thresholds and saddles neatly to minimally fit the profile of the door frame. Set thresholds in bed of mastic sealant, forming tight seal between threshold and surface to which set.

F. Use only fasteners furnished by manufacturer for installation as recommended by manufacturer.

G. Install blocking material for all wall mounted door stops at height appropriate to contact door trim.

H. Install weather-strip prior to installation of door closers and exit devices. Do not cut or notch weather-strip.

I. Locate electric hinges at second hinge from bottom of frame.

J. Termination of wiring: Ensure wiring is in place and is connected for proper operation of hardware.

3.3 FIELD QUALITY CONTROL

A. Verify doors open and close smoothly without rubbing or catching and have positive latching where scheduled. Verify fire rated doors are installed with clearances in compliance with NFPA 80.

B. Test electrified hold open devices tied into fire alarm system to confirm release upon activation of fire alarm. Test electrified hardware and access control to verify systems operate as directed in mode of operation. Where hardware is found to be inoperable, repair or replace with new.

3.4 ADJUSTING AND CLEANING

A. Upon substantial completion, make final adjustments to door closers and other items of hardware after balance of heating and ventilating equipment to ensure doors close and latch properly.

B. Clean and polish all exposed hardware surfaces in accordance with manufacturer's recommended procedures.

C. Clean or repair pencil or tool marks from adjacent surfaces damaged or soiled by work of this Section.

D. Recycle cardboard boxes and paper products used in packaging and transport of finish hardware.

3.5 PROTECTION

A. Remove hardware prior to painting or finishing door and frame. Wrap or mask exposed hardware that cannot be removed until date of substantial completion to avoid exposure to paint, solvents, and abuse.
B. Repair or replace hardware damaged during construction at least two weeks prior to date of substantial completion.

3.6 SCHEDULES

A. Should items of hardware not definitely specified be required for completion of the Work, furnish such items of type and quality comparable to adjacent hardware and appropriate for service required.

B. Where items of hardware aren't definitely or correctly specified, are required for completion of the Work, a written statement of such omission, error, or other discrepancy to Architect, prior to date specified for receipt of bids for clarification by addendum; or, furnish such items in the type and quality established by this specification, and appropriate to the service intended.

Manufacturer List

Code	Name
AB	ABH Manufacturing Inc.
BE	Best Access Systems
BY	By Others
CR	Corbin Russwin
DJ	Don-Jo
HS	HES
LC	LCN Closers
NA	National Guard
PR	Precision
RO	Rockwood
ST	Stanley
TR	Trimco
YA	Yale

Option List

Code	Description
CD	CYLINDER DOGGING
FL	Fire Exit Hardware
LM	LOST MOTION
S3	ANSI Strike Package
B4E	BEVELED 4 EDGES
COR-RC	IC Corbin Cylinder

CSK	COUNTER SINKING
LBR	LESS BOTTOM ROD
STK	Standard Strike Package
TBWMS MC	TB & WMS Package
7/8"LTC	7/8" Lip-To-Center Strike
SNB	SEX BOLTS
4040-18PA	Drop Plate
1/4-20 SSMS/LA	STAINLESS MS/LEAD ANCHOR

Finish List

Code	Description
S	Stainless Steel
AL	Aluminum
600	Primed for Painting
606	Satin Brass, Clear Coated
626	Satin Chromium Plated
630	Satin Stainless Steel
USP	Spray Primed
626W	Weatherized Satin Chrome
GREY	Grey
US26D	Chromium Plated, Dull
US32D	Stainless Steel, Dull

Hardware Sets

SET #01 - Exterior Pr x Remov Mullion x Exit Only

Doors: B136C-1E, B153-1E, ST3-1-2E, ST4-1-2E

2	Continuous Hinge	664HD UL	AL	ST
1	Removable Mullion	822	600	PR
2	Exit Device	2101 X 4901 CD SNB (2)	626W	PR
2	Mortise Cylinder	1037	626	CR
2	Closer	4040 XP SCUSH TBWMS MC	AL	LC
2	Kick Plate	K0050 10" x 1" LDW B4E CSK	630	TR
1	Mullion Seal	5100N		NA
1	Gasketing	700 NA @ Head & Jambs		NA
2	Door Sweep	200 NA		NA
1	Saddle Threshold	420 E Series Verify size and width 1/4-20 SSMS/LA		AL

NOTE: Frames and doors to be Adjusted, Patched or Modified for the new hardware as required by the GC. Fill or patch all remaining visible holes or preps.

SET #02 - Exterior Pr x Fixed Mullion x Exit Only

Doors: A117-2E, A119-2E, A124-1E, A125-2E, C100A-3E, C111-1E, C114-1E, **C100B-3E, C100B-4E**

2	Continuous Hinge	664HD UL	AL	ST
2	Exit Device	2101 X 4901 CD SNB (2)	626W	PR
2	Mortise Cylinder	1037	626	CR
2	Closer	4040 XP SCUSH TBWMS MC	AL	LC
2	Kick Plate	K0050 10" x 1" LDW B4E CSK	630	TR
1	Mullion Seal	5100N		NA
2	Gasketing	700 NA @ Head & Jambs		NA
2	Door Sweep	200 NA		NA
1	Saddle Threshold	420 E Series Verify size and width 1/4-20 SSMS/LA		AL

NOTE: Frames and doors to be Adjusted, Patched or Modified for the new hardware as required by the GC. Fill or patch all remaining visible holes or preps.

SET #03 - Exterior SGL x Exist Door x Exit Only

Doors: B146-2E, B150-3E, C108-3E, C108-4E

1	Continuous Hinge	664HD UL	AL	ST
1	Exit Device	2101 X 4901 CD SNB (2)	626W	PR
1	Mortise Cylinder	1037	626	CR
1	Closer	4040 XP SCUSH TBWMS MC	AL	LC
1	Kick Plate	K0050 10" x 2" LDW B4E CSK	630	TR
1	Gasketing	700 NA @ Head & Jambs		NA
1	Door Sweep	200 NA		NA
1	Saddle Threshold	420 E Series Verify size and width 1/4-20 SSMS/LA		AL

NOTE: Frames and doors to be Adjusted, Patched or Modified for the new hardware as required by the GC. Fill or patch all remaining visible holes or preps.

SET #04 - Exterior Pair to remain.

Doors: B142B-1E

1	Cylinder	3037	626	CR

NOTE: Balance of existing hardware to remain.

SET #05 - Exterior Pr Locker Room x Exit Only

Doors: B138-4E

2	Continuous Hinge	664HD UL	AL	ST
2	Exit Device	2201 X 4901 CD LBR SNB (4)	626W	PR
2	Mortise Cylinder	1037	626	CR

2	Closer	4040 XP SCUSH TBWMS MC	AL	LC
2	Kick Plate	K0050 10" x 1" LDW B4E CSK	630	TR
2	Vertical Rod Cover	BFRC24	US32D	RO
1	Gasketing	700 NA @ Head & Jambs		NA
1	Astragal Set	140 PA Set		NA
2	Door Sweep	200 NA		NA
1	Saddle Threshold	420 E Series Verify size and width 1/4-20 SSMS/LA		AL

NOTE: Existing screen doors to remain.Frames and doors to be Adjusted, Patched or Modified for the new hardware as required by the GC. Fill or patch all remaining visible holes or preps.

SET #06 - Ext Pair x Fixed Mull x Access Control

Doors: A124-2E, A125-1E, C100A-4E

2	Continuous Hinge	664HD UL	AL	ST
1	Exit Device	2103 CD SNB (2)	626W	PR
1	Exit Device	2101 X 4901 CD SNB (2)	626W	PR
2	Mortise Cylinder	1037	626	CR
1	Rim Cylinder	3037	626	CR
1	Electric Strike	9600 LBM	630	HS
1	Anti-Vandal Pull	1097HA SP	630	TR
2	Closer	4040 XP SCUSH TBWMS MC	AL	LC
2	Kick Plate	K0050 10" x 1" LDW B4E CSK	630	TR
1	Mullion Seal	5100N		NA
2	Gasketing	700 NA @ Head & Jambs		NA
2	Door Sweep	200 NA		NA
1	Saddle Threshold	420 E Series Verify size and width 1/4-20 SSMS/LA		AL

NOTE: Verify Electric Strike and Pull Leaf. Operation: Doors normaly closed and locked. Call box on exterior by others to request entry. If accepted the electric strike will be released allowing entry. Egress always allowed. Coordinate wiring with related trades. Frames and doors to be Adjusted, Patched or Modified for the new hardware as required by the GC. Fill or patch all remaining visible holes or preps. Template closers so inside pair of doors do not hit back to back.

SET #07 - Vest Pair x Fixed Mullion

Doors: C100A-2E **C100B-1E, C100B-2E**

2	Continuous Hinge	664HD UL	AL	ST
2	Exit Device	2114 X 4914A CD SNB (2)	630	PR
2	Mortise Cylinder	1037	626	CR
2	Closer	4040 XP SCUSH TBWMS MC	AL	LC
2	Kick Plate	K0050 10" x 1" LDW B4E CSK	630	TR
1	Mullion Seal	5100N		NA

NOTE: Frames and doors to be Adjusted, Patched or Modified for the new hardware as required by the GC. Fill or patch all remaining visible holes or preps. Template closers so inside pair of doors do not hit back to back.

SET #07A - Vest Pair x Fixed Mullion

Doors: C100A-1E

2	Continuous Hinge	664HD UL	AL	ST
1	Removable Mullion	822	600	PR
2	Exit Device	2114 X 4914A CD SNB (2)	630	PR
2	Mortise Cylinder	1037	626	CR
2	Closer	4040 XP SCUSH TBWMS MC	AL	LC
2	Kick Plate	K0050 10" x 1" LDW B4E CSK	630	TR
1	Mullion Seal	5100N		NA

NOTE: Frames and doors to be Adjusted, Patched or Modified for the new hardware as required by the GC. Fill or patch all remaining visible holes or preps. Template closers so inside pair of doors do not hit back to back.

SET #08 - Corr Pair x Fixed Mullion x Exist Doors

Doors: A117-1E, A119-1E

2	Continuous Hinge	664HD UL	AL	ST
1	Exit Device	2101 X 4901 CD SNB (2)	630	PR
1	Exit Device	2103 CD SNB (2)	630	PR
2	Mortise Cylinder	1037	626	CR
1	Rim Cylinder	3037	626	CR
1	Anti-Vandal Pull	1097HA SP	630	TR
2	Closer	4040 XP SCUSH TBWMS MC	AL	LC
2	Kick Plate	K0050 10" x 1" LDW B4E CSK	630	TR
1	Mullion Seal	5100N		NA
2	Gasketing	2525 B		NA
2	Door Sweep	200 NA		NA

NOTE: Frames and doors to be Adjusted, Patched or Modified for the new hardware as required by the GC. Fill or patch all remaining visible holes or preps. Template closers so inside pair of doors do not hit back to back.

SET #09 - Pair Storage Rm x New Doors

Doors: A112-1, A113-1

2	Continuous Hinge	663HD UL	AL	ST
2	Flush Bolt	3917	626	TR
1	Deadlock	48H-0R	626	BE
1	Mortise Cylinder	1037	626	CR
2	Flush Pull	1115	630	TR
1	Closer	4040 XP SHCUSH TBWMS MC	AL	LC
1	Overhead Stop	9020 Series	US32D	AB

2	Kick Plate	K0050 10" x 1" LDW B4E CSK	630	TR
1	Dustproof Strike	3910	626	TR
1	Saddle Threshold	420 E Series Verify size and width 1/4-20 SSMS/LA		AL
2	Door Silencers	1229A	GREY	TR

NOTE: Frames and doors to be Adjusted, Patched or Modified for the new hardware as required by the GC. Fill or patch all remaining visible holes or preps.

SET #10 - Gym New Opng Pair

Doors: A116-1, A118-1

2	Continuous Hinge	663HD UL	AL	ST
1	Removable Mullion	822	600	PR
1	Exit Device	2101 X 4901 CD SNB (2)	630	PR
1	Exit Device	2103 CD SNB (2)	630	PR
2	Mortise Cylinder	1037	626	CR
1	Rim Cylinder	3037	626	CR
2	Anti-Vandal Pull	1097HA SP	630	TR
2	Closer	4040 XP SCUSH TBWMS MC	AL	LC
2	Kick Plate	K0050 10" x 1" LDW B4E CSK	630	TR
1	Mullion Seal	5100N		NA
1	Gasketing	2525 B		NA

SET #11 - Office Entry x New HM Doors

Doors: B100-1E

2	Continuous Hinge	663HD UL	AL	ST
1	Exit Device	2203 X 4903A CD LBR SNB (4)	630	PR
1	Exit Device	2202 X 4902A CD LBR SNB (4)	630	PR
2	Mortise Cylinder	1037	626	CR
1	Rim Cylinder	3037	626	CR
2	Closer	4040 XP SHCUSH 4040-18PA TBWMS MC	AL	LC
1	Astragal Seal	5070		NA
1	Gasketing	2525 B		NA

NOTE: Frames and doors to be Adjusted, Patched or Modified for the new hardware as required by the GC. Fill or patch all remaining visible holes or preps.

SET #12 - Existing Maintenance x Best Core

Doors: B136-3E

1	Continuous Hinge	664HD UL	AL	ST
1	Exit Device	2103 CD SNB (2)	626W	PR
1	Anti-Vandal Pull	1097HA SP	630	TR
1	Rim Cylinder	12E (Best Core)	626	BE
1	Mortise Cylinder	1037	626	CR
1	Closer	4040 XP SCUSH TBWMS MC	AL	LC

1	Kick Plate	K0050 10" x 2" LDW B4E CSK	630	TR
1	Gasketing	700 NA @ Head & Jambs		NA
1	Door Sweep	200 NA		NA

NOTE: Threshold to remain. Frames and doors to be Adjusted, Patched or Modified for the new hardware as required by the GC. Fill or patch all remaining visible holes or preps. Keyed to School District "BEST" maintenance key.

SET #13 - Anteroom/ Boiler x Best Core New Opng

Doors: B134C-1

1	Continuous Hinge	663HD UL	AL	ST
1	Storeroom Lockset	9K3-7D15D LM S3	626	BE
1	Closer	4040 XP EDA TBWMS MC	AL	LC
1	Kick Plate	K0050 10" x 2" LDW B4E CSK	630	TR
1	Wall Bumper	1270CXPV	626	TR
3	Door Silencers	1229A	GREY	TR

NOTE: The Existing "BEST" core to be turned over to the PSD as construction begins that part of school.

SET #14 - Anteroom/ Boiler x Best Core New Opng

Doors: B134C-2

1	Continuous Hinge	663HD UL	AL	ST
1	Classroom Lockset	9K3-7R15D LM S3	626	BE
1	Closer	4040 XP EDA TBWMS MC	AL	LC
1	Kick Plate	K0050 10" x 2" LDW B4E CSK	630	TR
1	Wall Bumper	1270CXPV	626	TR
3	Door Silencers	1229A	GREY	TR

NOTE: The Existing "BEST" core to be turned over to the PSD as construction begins that part of school.

\ SET #15 - Stair Pair x Fixed Mullion x New Doors

Doors: ST1-1-1E, ST1-1-2E, ST1-2-1E, ST1-3-1E, ST2-1-1E, ST2-2-1E, ST2-3-1E, ST3-1-1E, ST3-2-1E

2	Continuous Hinge	664HD UL	AL	ST
1	Exit Device	FL 2114 X 4914A SNB (2)	630	PR
1	Exit Device	FL 2101 X 4901 SNB (2)	630	PR
2	Closer	4040 XP EDA TBWMS MC	AL	LC
2	Kick Plate	K0050 10" x 2" LDW B4E CSK	630	TR
2	Wall Bumper	1270CXPV	626	TR
1	Mullion Seal	5100N		NA
2	Gasketing	2525 B		NA

2	Door Sweep	200 NA		NA

NOTE: Frames and doors to be Adjusted, Patched or Modified for the new hardware as required by the GC. Inspect and bring openings up to working code for stairwells, including refurbishing thresholds if needed by GC.

SET #16 - Stair x New Doors x Remov Mullion

Doors: ST4-1-1E, ST4-2-1E, ST4-3-1E

2	Continuous Hinge	664HD UL	AL	ST
1	Removable Mullion	FL822	600	PR
1	Exit Device	FL 2114 X 4914A SNB (2)	630	PR
1	Exit Device	FL 2101 X 4901 SNB (2)	630	PR
2	Closer	4040 XP EDA TBWMS MC	AL	LC
2	Kick Plate	K0050 10" x 2" LDW B4E CSK	630	TR
2	Wall Bumper	1270CXPV	626	TR
1	Mullion Seal	5100N		NA
1	Gasketing	2525 B		NA
2	Door Sweep	200 NA		NA

NOTE: Frames and doors to be Adjusted, Patched or Modified for the new hardware as required by the GC. Inspect and bring openings up to working code for stairwells, including refurbishing thresholds if needed by GC.

SET #17 - Stair x New Dr x Fixed Mulli x FL Stops

Doors: ST2-1-2E

2	Continuous Hinge	664HD UL	AL	ST
1	Exit Device	FL 2114 X 4914A SNB (2)	630	PR
1	Exit Device	FL 2101 X 4901 SNB (2)	630	PR
2	Closer	4040 XP SCUSH TBWMS MC	AL	LC
2	Kick Plate	K0050 10" x 2" LDW B4E CSK	630	TR
1	Mullion Seal	5100N		NA
2	Gasketing	2525 B		NA
2	Door Sweep	200 NA		NA

NOTE: Frames and doors to be Adjusted, Patched or Modified for the new hardware as required by the GC. Inspect and bring openings up to working code for stairwells, including refurbishing thresholds if needed by GC.

SET #18 - Stair x New Doors x Remov Mullion

Doors: ST2-1-3

2	Continuous Hinge	664HD UL	AL	ST

1	Removable Mullion	FL822	600	PR
1	Exit Device	FL 2114 X 4914A SNB (2)	630	PR
1	Exit Device	FL 2101 X 4901 SNB (2)	630	PR
1	Closer	4040 XP EDA TBWMS MC	AL	LC
1	Closer	4040 XP SCUSH TBWMS MC	AL	LC
		NOTE: Mount on LHR Leaf (Lift door side)		
2	Kick Plate	K0050 10" x 2" LDW B4E CSK	630	TR
1	Wall Bumper	1270CXPV	626	TR
1	Mullion Seal	5100N		NA
1	Gasketing	2525 B		NA
2	Door Sweep	200 NA		NA

NOTE: Frames and doors to be Adjusted, Patched or Modified for the new hardware as required by the GC. Inspect and bring openings up to working code for stairwells, including refurbishing thresholds if needed by GC.

SET #19 - Stair x New Doors x Fixed Mullion

Doors: ST3-3-1E

2	Continuous Hinge	664HD UL	AL	ST
1	Exit Device	FL 2114 X 4914A SNB (2)	630	PR
1	Exit Device	FL 2101 X 4901 SNB (2)	630	PR
1	Closer	4040 XP EDA TBWMS MC	AL	LC
1	Closer	4040 XP SCUSH TBWMS MC	AL	LC
		NOTE: Mount on RHR Leaf.		
2	Kick Plate	K0050 10" x 2" LDW B4E CSK	630	TR
1	Wall Bumper	1270CXPV	626	TR
1	Mullion Seal	5100N		NA
1	Gasketing	2525 B		NA
2	Door Sweep	200 NA		NA

NOTE: Frames and doors to be Adjusted, Patched or Modified for the new hardware as required by the GC. Inspect and bring openings up to working code for stairwells, including refurbishing thresholds if needed by GC.

SET #20 - Classroom, Office, Lab x New Door

Doors: B100-2, B100-3, B102-2, B104-1, B106-1, B106-2, B152-1, B156-1, B208-1, B210-1, B212D-1, B212D-2, B220-1, B222-1, B232-1, B234-1, B236B-1, B236B-2, B238-1, B244-1, B246-1, B301-1, B301-2, B310-1, B312D-1, B312D-2, B320-1, B322-1, B332-1, B333-1, B336B-2, B344-1, B346-1, B206-1, B216-1, B218-1, B230-1, B242-1, B308-1, B316-1, B318-1, B330-1, B342-1, B237B-1, B237B-2

1	Continuous Hinge	663HD UL	AL	ST

1	Intruder Lockset	9K3-0IN15D COR-RC LM S3	626	BE
1	Cylinder Core IC	8027	626	CR
1	Cylinder Core IC	8027 (Inside Core)	606	CR
1	Closer	4040 XP EDA TBWMS MC	AL	LC
1	Kick Plate	K0050 10" x 2" LDW B4E CSK	630	TR
1	Wall Bumper	1270CXPV	626	TR
3	Door Silencers	1229A	GREY	TR

NOTE: Frames and doors to be Adjusted, Patched or Modified for the new hardware as required by the GC. Fill or patch all remaining visible holes or preps.

SET #21 - SET NOT USED

Doors:

1	Continuous Hinge	663HD UL	AL	ST
1	Intruder Lockset	9K3-0IN15D COR-RC LM S3	626	BE
1	Cylinder Core IC	8027	626	CR
1	Cylinder Core IC	8027 (Inside Core)	606	CR
1	Closer	4040 XP EDA TBWMS MC	AL	LC
1	Kick Plate	K0050 10" x 2" LDW B4E CSK	630	TR
1	Floor Stop	1214CK	626	TR
3	Door Silencers	1229A	GREY	TR

NOTE: Frames and doors to be Adjusted, Patched or Modified for the new hardware as required by the GC. Fill or patch all remaining visible holes or preps.

SET #22 - Class Rm/Recption/Office x New Door

Doors: B122-1, B124-1, B154-1, B201-1, B201-2, B202-1, B204-1, B214-1, B224-1, B224-2, B226-1, B228-1, B240-1, B300-1, B300-2, B301-3, B301-4, B302-1, B304-1, B314-1, B324-1, B324-2, B326-1, B328-1, B336B-1, B338-1, B340-1

1	Continuous Hinge	663HD UL	AL	ST
1	Intruder Lockset	9K3-0IN15D COR-RC LM S3	626	BE
1	Cylinder Core IC	8027	626	CR
1	Cylinder Core IC	8027 (Inside Core)	606	CR
1	Closer	4040 XP SCUSH TBWMS MC	AL	LC
1	Kick Plate	K0050 10" x 2" LDW B4E CSK	630	TR
3	Door Silencers	1229A	GREY	TR

NOTE: Frames and doors to be Adjusted, Patched or Modified for the new hardware as required by the GC. Fill or patch all remaining visible holes or preps.

SET #23 - Storeroom / Janitor x New Door

Doors: A104-1, A114A-1, B100A-1, B104A-3, B104H-1, B114-4, B150A-1, B200-3, B200-4, B210A-1, B211-1, B222A-1, B224A-3, B224A-4, B234A-1, B235-1, B246A-1, B300-3, B300-4, B310A-1, B311-1, B322A-1, B324-3, B324-4, B333A-1, B343-1, B346A-1, C104A-1, C110A-1, C110B-1

3	Hinges	FBB173 NRP (Verify Size and Weight in Field)		US26D
3	Back Plates	BP-1	US26D	ST
1	Storeroom Lockset	9K3-0D15D COR-RC LM S3	626	BE
1	Cylinder Core IC	8027	626	CR
1	Wall Bumper	1270CXPV	626	TR
3	Door Silencers	1229A	GREY	TR

NOTE: Frames and doors to be Adjusted, Patched or Modified for the new hardware as required by the GC. Fill or patch all remaining visible holes or preps.

SET #24 - Storeroom / Sch Store x New Door

Doors: B203-1, B303-1

3	Hinges	FBB173 NRP (Verify Size and Weight in Field)		US26D
3	Back Plates	BP-1	US26D	ST
1	Storeroom Lockset	9K3-0D15D COR-RC LM S3	626	BE
1	Cylinder Core IC	8027	626	CR
1	Closer	4040 XP EDA TBWMS MC	AL	LC
1	Kick Plate	K0050 10" x 2" LDW B4E CSK	630	TR
1	Wall Bumper	1270CXPV	626	TR
3	Door Silencers	1229A	GREY	TR

NOTE: Frames and doors to be Adjusted, Patched or Modified for the new hardware as required by the GC. Fill or patch all remaining visible holes or preps.

SET #25 - Storage / Study x New Door

Doors: B142A-1, B237C-1, B237D-1, B323-1, B325-1, C106A-1, C106B-1

3	Hinges	FBB173 NRP (Verify Size and Weight in Field)		US26D
3	Back Plates	BP-1	US26D	ST
1	Storeroom Lockset	9K3-0D15D COR-RC LM S3	626	BE
1	Cylinder Core IC	8027	626	CR
1	Overhead Stop	9020 Series	US32D	AB
3	Door Silencers	1229A	GREY	TR

NOTE: Frames and doors to be Adjusted, Patched or Modified for the new hardware as required by the GC. Fill or patch all remaining visible holes or preps.

SET #26 - Seminar x New Door

Doors: B233-1, B341-1

1	Continuous Hinge	663HD UL	AL	ST
1	Intruder Lockset	9K3-0IN15D COR-RC LM S3	626	BE
1	Cylinder Core IC	8027	626	CR

1	Cylinder Core IC	8027 (Inside Core)	606	CR
1	Wall Bumper	1270CVPV	626	TR
3	Door Silencers	1229A	GREY	TR

NOTE: Frames and doors to be Adjusted, Patched or Modified for the new hardware as required by the GC. Fill or patch all remaining visible holes or preps.

SET #27 - Office, Staff Rm, Choral x New Door

Doors: A110A-2, A111C-2, B102-1, B108-1, B114-5, B207-1, B209-1, B212A-1, B231B-1, B236C-1, B307-1, B309-1, B312A-1, B336C-1, B337-1, B339-1, C108A-1, C108C-1

3	Hinges	FBB173 NRP (Verify Size and Weight in Field)		US26D
3	Back Plates	BP-1	US26D	ST
1	Entry Lockset	9K3-0AB15D COR-RC LM S3	626	BE
1	Cylinder Core IC	8027	626	CR
1	Wall Bumper	1270CVPV	626	TR
3	Door Silencers	1229A	GREY	TR

NOTE: Frames and doors to be Adjusted, Patched or Modified for the new hardware as required by the GC. Fill or patch all remaining visible holes or preps.

SET #28 - Guidance / Office / Kitch x New Door

Doors: A110-1, A111-1, B212B-1, B236D-1, B312B-1, B336D-1

3	Hinges	FBB173 NRP (Verify Size and Weight in Field)		US26D
3	Back Plates	BP-1	US26D	ST
1	Entry Lockset	9K3-0AB15D COR-RC LM S3	626	BE
1	Cylinder Core IC	8027	626	CR
1	Overhead Stop	9020 Series	US32D	AB
3	Door Silencers	1229A	GREY	TR

NOTE: Frames and doors to be Adjusted, Patched or Modified for the new hardware as required by the GC. Fill or patch all remaining visible holes or preps.

SET #29 - Conference, Copy, Staff x New Door

Doors: B100B-1, B212C-1, B231A-1, B236A-1, B312C-1, B336A-1

3	Hinges	FBB173 NRP (Verify Size and Weight in Field)		US26D
3	Back Plates	BP-1	US26D	ST
1	Classroom Lockset	9K3-0R15D COR-RS LM S3	626	BE
1	Cylinder Core IC	8027	626	CR
1	Wall Bumper	1270CXPV	626	TR
3	Door Silencers	1229A	GREY	TR

NOTE: Frames and doors to be Adjusted, Patched or Modified for the new hardware as required by the GC. Fill or patch all remaining visible holes or preps.

SET #30 - Conference x New Door

Doors: B212C-2, B236A-2, B312C-2, B336A-2

3	Hinges	FBB173 NRP (Verify Size and Weight in Field)		US26D
3	Back Plates	BP-1	US26D	ST
1	Classroom Lockset	9K3-0R15D COR-RC LM S3	626	BE
1	Cylinder Core IC	8027	626	CR
1	Overhead Stop	9020 Series	US32D	AB
3	Door Silencers	1229A	GREY	TR

NOTE: Frames and doors to be Adjusted, Patched or Modified for the new hardware as required by the GC. Fill or patch all remaining visible holes or preps.

SET #31 - Toilet x New Door

Doors: B107-1, B111-1, B113-1, B117-1, B315-1, B319-1, B329-1, B331-1

1	Continuous Hinge	663HD UL	AL	ST
1	Deadlock	48H-0R	626	BE
1	Mortise Cylinder	1037	626	CR
1	Pull Plate	1014-3B	630	TR
1	Push Plate	1001-9	630	TR
1	Closer	4040 XP EDA TBWMS MC	AL	LC
1	Kick Plate	K0050 10" x 2" LDW B4E CSK	630	TR
1	Wall Bumper	1270CXPV	626	TR
3	Door Silencers	1229A	GREY	TR

NOTE: Frames and doors to be Adjusted, Patched or Modified for the new hardware as required by the GC. Fill or patch all remaining visible holes or preps.

SET #32 - Toilet x New Door

Doors: B103-1, B105-1, B213-1, B229-1, B313-1, B335-1

1	Continuous Hinge	663HD UL	AL	ST
1	Storeroom Lockset	9K3-0D15D COR-RC LM S3	626	BE
1	Cylinder Core IC	8027	626	CR
1	Closer	4040 XP EDA TBWMS MC	AL	LC
1	Kick Plate	K0050 10" x 2" LDW B4E CSK	630	TR
1	Wall Bumper	1270CXPV	626	TR
3	Door Silencers	1229A	GREY	TR

NOTE: Frames and doors to be Adjusted, Patched or Modified for the new hardware as required by the GC. Fill or patch all remaining visible holes or preps.

SET #33 - Staff Toilet x New Door

Doors: B213A-1, B229A-1, B313A-1, B335A-1

1	Continuous Hinge	663HD UL	AL	ST
1	Privacy Set	9K3-0L15D S3	626	BE
1	Closer	4040 XP EDA TBWMS MC	AL	LC
1	Kick Plate	K0050 10" x 2" LDW B4E CSK	630	TR
1	Wall Bumper	1270CXPV	626	TR
3	Door Silencers	1229A	GREY	TR

NOTE: Frames and doors to be Adjusted, Patched or Modified for the new hardware as required by the GC. Fill or patch all remaining visible holes or preps.

SET #34 - Music room x New Door

Doors: B200-1, B200-2

1	Continuous Hinge	663HD UL	AL	ST
1	Intruder Lockset	9K3-0IN15D COR-RC LM S3	626	BE
1	Cylinder Core IC	8027	626	CR
1	Cylinder Core IC	8027 (Inside Core)	606	CR
1	Closer	4040 XP SCUSH TBWMS MC	AL	LC
1	Kick Plate	K0050 10" x 2" LDW B4E CSK	630	TR
1	Gasketing	5050 B		NA

NOTE: Frames and doors to be Adjusted, Patched or Modified for the new hardware as required by the GC. Fill or patch all remaining visible holes or preps.

SET #35 - Seminar / Corr x New Door

Doors: B101A-2, B102A-1, B126-1, B205-1, B305-1

1	Continuous Hinge	663HD UL	AL	ST
1	Intruder Lockset	9K3-0IN15D COR-RC LM S3	626	BE
1	Cylinder Core IC	8027	626	CR
1	Cylinder Core IC	8027 (Inside Core)	606	CR
1	Closer	4040 XP EDA TBWMS MC	AL	LC
1	Kick Plate	K0050 10" x 2" LDW B4E CSK	630	TR
1	Wall Bumper	1270CXPV	626	TR
3	Door Silencers	1229A	GREY	TR

NOTE: Frames and doors to be Adjusted, Patched or Modified for the new hardware as required by the GC. Fill or patch all remaining visible holes or preps.

SET #36 - Library x New Door

Doors: B221-1, B221-2

1	Continuous Hinge	663HD UL	AL	ST
1	Exit Device	2103 X 4903A CD SNB (2)	630	PR
1	Mortise Cylinder	1037	626	CR
1	Rim Cylinder	3037	626	CR
1	Closer	4040 XP SCUSH TBWMS MC	AL	LC

1	Kick Plate	K0050 10" x 2" LDW B4E CSK	630	TR
1	Gasketing	5050 B		NA

NOTE: Frames and doors to be Adjusted, Patched or Modified for the new hardware as required by the GC. Fill or patch all remaining visible holes or preps.

SET #37 - Media Ctr/ Choral x New Doors

Doors: B2E-1, B2F-1, B3E1, B3F-1, C108-1, C108-2, C145-1

2	Continuous Hinge	663HD UL	AL	ST
1	Exit Device	2203 X 4903A CD LBR SNB (4)	630	PR
1	Exit Device	2201 CD LBR SNB (8)	630	PR
2	Mortise Cylinder	1037	626	CR
1	Rim Cylinder	3037	626	CR
2	Closer	4040 XP EDA TBWMS MC	AL	LC
2	Kick Plate	K0050 10" x 1" LDW B4E CSK	630	TR
2	Wall Bumper	1270CXPV	626	TR
2	Vertical Rod Cover	BFRC24	US32D	RO
1	Gasketing	5050 B		NA
1	Astragal Seal	5070		NA

NOTE: Frames and doors to be Adjusted, Patched or Modified for the new hardware as required by the GC. Fill or patch all remaining visible holes or preps.

SET #38 - Conference x New Door

Doors: B237A-1

3	Hinges	FBB173 NRP (Verify Size and Weight in Field)		US26D
3	Back Plates	BP-1	US26D	ST
1	Intruder Lockset	9K3-0IN15D COR-RC LM S3	626	BE
1	Cylinder Core IC	8027	626	CR
1	Cylinder Core IC	8027 (Inside Core)	606	CR
1	Overhead Stop	9020 Series	US32D	AB
3	Door Silencers	1229A	GREY	TR

NOTE: Frames and doors to be Adjusted, Patched or Modified for the new hardware as required by the GC. Fill or patch all remaining visible holes or preps.

SET #39 - Staff Cafe x New Door

Doors: B158-1

1	Continuous Hinge	663HD UL	AL	ST
1	Exit Device	2103 X 4903A CD SNB (2)	630	PR
1	Mortise Cylinder	1037	626	CR
1	Rim Cylinder	3037	626	CR
1	Closer	4040 XP EDA TBWMS MC	AL	LC

1	Kick Plate	K0050 10" x 2" LDW B4E CSK	630	TR
1	Wall Bumper	1270CXPV	626	TR
3	Door Silencers	1229A	GREY	TR

NOTE: Frames and doors to be Adjusted, Patched or Modified for the new hardware as required by the GC. Fill or patch all remaining visible holes or preps.

SET #40 - Cot Room x New Door

Doors: B104B-1, B104D-1

3	Hinges	FBB173 NRP (Verify Size and Weight in Field)		US26D
3	Back Plates	BP-1	US26D	ST
1	Passage Set	9K3-0N15D S3	626	BE
1	Wall Bumper	1270CXPV	626	TR
3	Door Silencers	1229A	GREY	TR

NOTE: Frames and doors to be Adjusted, Patched or Modified for the new hardware as required by the GC. Fill or patch all remaining visible holes or preps.

SET #41 - Bathroon x New Door

Doors: B104B-2, B104D-2

3	Hinges	FBB179 4 1/2 X 4 1/2	US26D	ST
3	Back Plates	BP-1	US26D	ST
1	Hosp Privacy Set	9K3-0LL15D S3	626	BE
1	Wall Bumper	1270CVPV	626	TR
3	Door Silencers	1229A	GREY	TR

NOTE: Frames and doors to be Adjusted, Patched or Modified for the new hardware as required by the GC. Fill or patch all remaining visible holes or preps.

SET #42 - Exam Room x New Door

Doors: B104F-1

3	Hinges	FBB173 NRP (Verify Size and Weight in Field)		US26D
3	Back Plates	BP-1	US26D	ST
1	Hosp Privacy Set	9K3-0LL15D S3	626	BE
1	Floor Stop	1214CK	626	TR
3	Door Silencers	1229A	GREY	TR

NOTE: Frames and doors to be Adjusted, Patched or Modified for the new hardware as required by the GC. Fill or patch all remaining visible holes or preps.

SET #43 - Principal, Reception x New Door

Doors: B110-1, B112-1, B114-1, B114-2, B120A-1

3	Hinges	FBB173 NRP (Verify Size and Weight in Field)		US26D

3	Back Plates	BP-1	US26D	ST
1	Intruder Lockset	9K3-0IN15D COR-RC LM S3	626	BE
1	Cylinder Core IC	8027	626	CR
1	Cylinder Core IC	8027 (Inside Core)	606	CR
1	Wall Bumper	1270CXPV	626	TR
3	Door Silencers	1229A	GREY	TR

NOTE: Frames and doors to be Adjusted, Patched or Modified for the new hardware as required by the GC. Fill or patch all remaining visible holes or preps.

SET #44 - Store x New Door

Doors: B128-1, B128-2

3	Hinges	FBB173 NRP (Verify Size and Weight in Field)		US26D
3	Back Plates	BP-1	US26D	ST
1	Deadlock	48H-0R	626	BE
1	Mortise Cylinder	1037	626	CR
1	Pull Plate	1014-3B	630	TR
1	Push Plate	1001-3	626	TR
1	Closer	4040 XP SCUSH TBWMS MC	AL	LC
1	Kick Plate	K0050 10" x 2" LDW B4E CSK	630	TR
3	Door Silencers	1229A	GREY	TR

NOTE: Frames and doors to be Adjusted, Patched or Modified for the new hardware as required by the GC. Fill or patch all remaining visible holes or preps.

SET #45 - Locker Rm / Gym x New Door

Doors: A107-1, A107-2, A110A-1, A111C-1

1	Continuous Hinge	663HD UL	AL	ST
1	Exit Device	2108 X V4908A CD SNB (2)	630	PR
1	Mortise Cylinder	1037	626	CR
1	Rim Cylinder	3037	626	CR
1	Closer	4040 XP EDA TBWMS MC	AL	LC
1	Kick Plate	K0050 10" x 2" LDW B4E CSK	630	TR
1	Wall Bumper	1270CXPV	626	TR
3	Door Silencers	1229A	GREY	TR
1	Saddle Threshold	420 E Series Verify size and width 1/4-20 SSMS/LA		AL
		NOTE: Thresholds at Doors A107-1 & A107-2 Only		

NOTE: Provide Threshold at Doors A107-1 & A107-2. Verify size. Frames and doors to be Adjusted, Patched or Modified for the new hardware as required by the GC.

SET #46 - IT Server x New Door

Doors: B130-1

3	Hinges	FBB173 NRP (Verify Size and Weight in Field)	US26D

3	Back Plates	BP-1	US26D	ST
1	Deadlock	48H-0R	626	BE
1	Mortise Cylinder	1037	626	CR
1	Pull Plate	1014-3B	630	TR
1	Push Plate	1001-9	630	TR
1	Closer	4040 XP SCUSH TBWMS MC	AL	LC
1	Kick Plate	K0050 10" x 2" LDW B4E CSK	630	TR
3	Door Silencers	1229A	GREY	TR

NOTE: Frames and doors to be Adjusted, Patched or Modified for the new hardware as required by the GC. Fill or patch all remaining visible holes or preps.

SET #47 - Machine Rm x New Door

Doors: B132-1

1	Continuous Hinge	663HD UL	AL	ST
1	Storeroom Lockset	9K3-0D15D COR-RC LM S3	626	BE
1	Cylinder Core IC	8027	626	CR
1	Closer	4040 XP SCUSH TBWMS MC	AL	LC
1	Kick Plate	K0050 10" x 2" LDW B4E CSK	630	TR
1	Gasketing	2525 B		NA

NOTE: Frames and doors to be Adjusted, Patched or Modified for the new hardware as required by the GC. Fill or patch all remaining visible holes or preps.

SET #48 - Cafe x New Doors

Doors: B101-1, B101-2, B101-3, B101-4

2	Continuous Hinge	663HD UL	AL	ST
1	Exit Device	2203 X 4903A CD LBR SNB (4)	630	PR
1	Exit Device	2201 CD LBR SNB (8)	630	PR
2	Mortise Cylinder	1037	626	CR
1	Rim Cylinder	3037	626	CR
2	Closer	4040 XP SHCUSH TBWMS MC	AL	LC
2	Kick Plate	K0050 10" x 1" LDW B4E CSK	630	TR
2	Vertical Rod Cover	BFRC24	US32D	RO
1	Astragal Seal	5070		NA
1	Gasketing	2525 B		NA

NOTE: Frames and doors to be Adjusted, Patched or Modified for the new hardware as required by the GC. Fill or patch all remaining visible holes or preps.

SET #49 - Audio Rm x Exist Door

Doors: B104G-1E

1	Continuous Hinge	664HD UL	AL	ST
1	Storeroom Lockset	9K3-0D15D COR-RC LM S3	626	BE
1	Cylinder Core IC	8027	626	CR

1	Wall Bumper	1270CXPV	626	TR
1	Wrap-Around	12 Series as REQ'D	S	DJ
3	Door Silencers	1229A	GREY	TR

NOTE: Frames and doors to be Adjusted, Patched or Modified for the new hardware as required by the GC. Fill or patch all remaining visible holes or preps.

SET #50 - Toilet x New Door

Doors: B114-3

3	Hinges	FBB173 NRP (Verify Size and Weight in Field)		US26D
3	Back Plates	BP-1	US26D	ST
1	Privacy Set	9K3-0L15D S3	626	BE
1	Overhead Stop	4420 Series	US32D	AB
3	Door Silencers	1229A	GREY	TR

NOTE: Frames and doors to be Adjusted, Patched or Modified for the new hardware as required by the GC. Fill or patch all remaining visible holes or preps.

SET #51 - Mechanical Pair x New Door

Doors: B101D-1, B148-1, B150B-1

2	Continuous Hinge	663HD UL	AL	ST
2	Flush Bolt	3917	626	TR
1	Storeroom Lockset	9K3-0D15D 7/8" LTC COR-RC LM	626	BE
1	Cylinder Core IC	8027	626	CR
1	Closer	4040 XP EDA TBWMS MC	AL	LC
2	Kick Plate	K0050 10" x 1" LDW B4E CSK	630	TR
1	Overhead Stop	9020 Series	US32D	AB
1	Wall Bumper	1270CXPV	626	TR
1	Dustproof Strike	3910	626	TR
1	Gasketing	5050 B		NA

NOTE: Frames and doors to be Adjusted, Patched or Modified for the new hardware as required by the GC. Fill or patch all remaining visible holes or preps.

SET #52 - Storage Pair x New Door

Doors: C110C-1, C110C-2

6	Hinges	FBB173 NRP (Verify Size and Weight in Field)		US26D
6	Back Plates	BP-1	US26D	ST
2	Flush Bolt	3917	626	TR
1	Storeroom Lockset	9K3-0D15D 7/8" LTC COR-RC LM	626	BE
1	Cylinder Core IC	8027	626	CR
1	Closer	4040 XP SCUSH TBWMS MC	AL	LC
2	Kick Plate	K0050 10" x 1" LDW B4E CSK	630	TR
1	Overhead Stop	9020 Series	US32D	AB

1	Dustproof Strike	3910	626	TR
2	Door Silencers	1229A	GREY	TR

NOTE: Frames and doors to be Adjusted, Patched or Modified for the new hardware as required by the GC. Fill or patch all remaining visible holes or preps.

SET #53 - Storage Room New Door

Doors: B101C-1E

3	Hinges	FBB173 NRP (Verify Size and Weight in Field)		US26D
3	Back Plates	BP-1	US26D	ST
1	Storeroom Lockset	9K3-0D15D COR-RC LM STK	626	BE
1	Cylinder Core IC	8027	626	CR
1	Wall Bumper	1270CXPV	626	TR
3	Door Silencers	1229A	GREY	TR

NOTE: Frames and doors to be Adjusted, Patched or Modified for the new hardware as required by the GC. Fill or patch all remaining visible holes or preps.

SET #54 - Custodial Office x New Door

Doors: B146-1

1	Continuous Hinge	663HD UL	AL	ST
1	Intruder Lockset	9K3-0IN15D COR-RC LM S3	626	BE
1	Cylinder Core IC	8027	626	CR
1	Cylinder Core IC	8027 (Inside Core)	606	CR
1	Closer	4040 XP EDA TBWMS MC	AL	LC
1	Kick Plate	K0050 10" x 2" LDW B4E CSK	630	TR
1	Wall Bumper	1270CXPV	626	TR
3	Door Silencers	1229A	GREY	TR

NOTE: Frames and doors to be Adjusted, Patched or Modified for the new hardware as required by the GC. Fill or patch all remaining visible holes or preps.

SET #55 - Vest x New Doors

Doors: B153A-1

2	Continuous Hinge	663HD UL	AL	ST
1	Exit Device	2208 X V4908A CD LBR SNB (4)	630	PR
1	Exit Device	2201 X 4901 CD LBR SNB (4)	626W	PR
2	Mortise Cylinder	1037	626	CR
1	Rim Cylinder	3037	626	CR
2	Closer	4040 XP SHCUSH TBWMS MC	AL	LC
2	Kick Plate	K0050 10" x 2" LDW B4E CSK	630	TR
2	Vertical Rod Cover	BFRC24	US32D	RO

1	Gasketing	2525 B		NA

NOTE: Frames and doors to be Adjusted, Patched or Modified for the new hardware as required by the GC. Fill or patch all remaining visible holes or preps.

SET #55A - Band x New Doors

Doors: C109-2

2	Continuous Hinge	663HD UL	AL	ST
1	Exit Device	2203 X 4903A CD LBR SNB (4)	630	PR
1	Exit Device	2201 X 4901 CD LBR SNB (4)	626W	PR
2	Mortise Cylinder	1037	626	CR
1	Rim Cylinder	3037	626	CR
2	Closer	4040 XP SHCUSH TBWMS MC	AL	LC
2	Kick Plate	K0050 10" x 2" LDW B4E CSK	630	TR
2	Vertical Rod Cover	BFRC24	US32D	RO
1	Gasketing	2525 B		NA

NOTE: Frames and doors to be Adjusted, Patched or Modified for the new hardware as required by the GC. Fill or patch all remaining visible holes or preps.

SET #56 - Mainterance Pr x Exist Doors

Doors: A102-1E, A103-1E, B136-1E

2	Continuous Hinge	664HD UL	AL	ST
2	Flush Bolt	3917	626	TR
1	Storeroom Lockset	9K3-0D15D 7/8" LTC COR-RC LM	626	BE
1	Cylinder Core IC	8027	626	CR
1	Closer	4040 XP SCUSH TBWMS MC	AL	LC
		NOTE: Active Leaf		
1	Overhead Stop	9020 Series	US32D	AB
2	Kick Plate	K0050 10" x 1" LDW B4E CSK	630	TR
1	Dustproof Strike	3910	626	TR
1	Wrap-Around	12 Series as REQ'D	S	DJ
1	Gasketing	2525 B		NA
2	Door Sweep	200 NA @ Doors B136-1E & B136B-1E		NA

NOTE: Verify locks and wrap around with existing doors. Frames and doors to be Adjusted, Patched or Modified for the new hardware as required by the GC. Fill or patch all remaining visible holes or preps by GC.

SET #56A - Mainterance Pr x Exist Doors

Doors: B136B-1E

2	Continuous Hinge	664HD UL	AL	ST
2	Flush Bolt	3917	626	TR
1	Classroom Lockset	45H-7R15J 7/8" LTC	626	BE

1	Cylinder Core IC	8027	626	CR
1	Closer	4040 XP SCUSH TBWMS MC	AL	LC
1	Overhead Stop	9020 Series	US32D	AB
2	Kick Plate	K0050 10" x 1" LDW B4E CSK	630	TR
1	Dustproof Strike	3910	626	TR
1	Gasketing	2525 B		NA
2	Door Sweep	200 NA @ Doors B136-1E & B136B-1E		NA

NOTE: Verify lock with existing doors. Frames and doors to be Adjusted, Patched or Modified for the new hardware as required by the GC. Fill or patch all remaining visible holes or preps by GC.

SET #57 - Transformer x Best Core, Exist Opng

Doors: B136C-2E

1	Continuous Hinge	664HD UL	AL	ST
1	Storeroom Lockset	9K3-7D15D LM S3	626	BE
1	Closer	4040 XP SCUSH TBWMS MC	AL	LC
1	Kick Plate	K0050 10" x 2" LDW B4E CSK	630	TR
1	Wrap-Around	12 Series as REQ'D	S	DJ
1	Gasketing	2525 B		NA
1	Door Sweep	200 NA		NA

NOTE: The Existing "BEST" core to be turned over to the PSD as construction begins that part of school. Frames and doors to be Adjusted, Patched or Modified for the new hardware as required by the GC. Fill or patch all remaining visible holes or preps. Keyed to School District "BEST" maintenance key.

SET #58 - Office x Best Core x Exist Opng

Doors: B136A-2E

1	Continuous Hinge	664HD UL	AL	ST
1	Entry Lockset	9K3-7AB15D LM S3	626	BE
1	Closer	4040 XP EDA TBWMS MC	AL	LC
1	Kick Plate	K0050 10" x 2" LDW B4E CSK	630	TR
1	Floor Stop	1214CK	626	TR
1	Wrap-Around	12 Series as REQ'D	S	DJ
1	Gasketing	2525 B		NA
1	Door Sweep	200 NA		NA

NOTE: The Existing "BEST" core to be turned over to the PSD as construction begins that part of school. Frames and doors to be Adjusted, Patched or Modified for the new hardware as required by the GC. Fill or patch all remaining visible holes or preps. Keyed to School District "BEST" maintenance key.

SET #59 - Kitchen x Existing Opng

Doors: B138-1E, B138-2E

3	Hinges	Reuse Existing	USP	BY
1	Deadlock	352	626	YA
1	Mortise Cylinder	1037	626	CR
1	Pull Plate	1014-3B	630	TR
1	Push Plate	1001-3	626	TR
1	Closer	4040 XP EDA TBWMS MC	AL	LC
1	Kick Plate	K0050 10" x 2" LDW B4E CSK	630	TR
1	Wall Bumper	1270CXPV	626	TR
1	Gasketing	5050 B		NA

NOTE: Verify hardware with existing door. Frames and doors to be Adjusted, Patched or Modified for the new hardware as required by the GC. Fill or patch all remaining visible holes or preps by GC. Verify hardware with code requirements.

SET #60 - Kitchen Pr x Exist Opng x Fixed Mullion

Doors: B138-3E

6	Hinges	Reuse Existing	USP	BY
2	Exit Device	FL 2108 X V4908A SNB (2)	630	PR
2	Rim Cylinder	3037	626	CR
2	Closer	4040 XP SCUSH TBWMS MC	AL	LC
2	Kick Plate	K0050 10" x 2" LDW B4E CSK	630	TR
2	Gasketing	5050 B		NA
1	Mullion Seal	5100N		NA

NOTE: Frames and doors to be Adjusted, Patched or Modified for the new hardware as required by the GC. Fill or patch all remaining visible holes or preps.

SET #61 - Storage x Exist Opng

Doors: B144-1E

3	Hinges	FBB179 4 1/2 X 4 1/2	US26D	ST
1	Storeroom Lockset	9K3-0D15D COR-RC LM S3	626	BE
1	Cylinder Core IC	8027	626	CR
1	Wall Bumper	1270CXPV	626	TR
1	Wrap-Around	12 Series as REQ'D	S	DJ
3	Door Silencers	1229A	GREY	TR

NOTE: Frames and doors to be Adjusted, Patched or Modified for the new hardware as required by the GC. Fill or patch all remaining visible holes or preps.

SET #62 - Fitness x Exist Opng

Doors: B140-1E, B140-2E

1	Continuous Hinge	664HD UL	AL	ST
1	Intruder Lockset	9K3-0IN15D COR-RC LM S3	626	BE
1	Cylinder Core IC	8027	626	CR
1	Cylinder Core IC	8027 (Inside Core)	606	CR
1	Wall Bumper	1270CXPV	626	TR
3	Door Silencers	1229A	GREY	TR

NOTE: Frames and doors to be Adjusted, Patched or Modified for the new hardware as required by the GC. Fill or patch all remaining visible holes or preps.

SET #63 - Fitness x Exist Opng

Doors: B142-1E

1	Cont Hinge	Reuse Existing	USP	BY
1	Exit Device	2103 X 4903A CD SNB (2)	630	PR
1	Mortise Cylinder	1037	626	CR
1	Rim Cylinder	3037	626	CR
1	Closer	4040 XP SCUSH TBWMS MC	AL	LC
3	Door Silencers	1229A	GREY	TR

NOTE: Frames and doors to be Adjusted, Patched or Modified for the new hardware as required by the GC. Fill or patch all remaining visible holes or preps.

SET #64 - Lobby/ Vest Pair x New Doors

Doors: C100-1, C100-2, C109D-1

2	Continuous Hinge	663HD UL	AL	ST
2	Pull Plate	1014-3B	630	TR
2	Push Plate	1001-3	626	TR
2	Closer	4040 XP SCUSH TBWMS MC	AL	LC
2	Kick Plate	K0050 10" x 1" LDW B4E CSK	630	TR
2	Door Silencers	1229A	GREY	TR

NOTE: Frames and doors to be Adjust, Patch or Modified for the new hardware as required by the GC. Fill or patch all remaining visible holes or preps by GC. Adjust closers to prevent doors from hitting each other when opened.

SET #65 - Auditorium, Band x New Wood Door

Doors: C109-1, C112-1, C112-2

1	Continuous Hinge	663HD UL	AL	ST
1	Exit Device	2103 X 4903A CD SNB (2)	630	PR
1	Mortise Cylinder	1037	626	CR
1	Rim Cylinder	3037	626	CR
1	Closer	4040 XP EDA TBWMS MC	AL	LC
1	Kick Plate	K0050 10" x 2" LDW B4E CSK	630	TR

1	Wall Bumper	1270CXPV	626	TR
1	Gasketing	2525 B		NA

NOTE: Frames and doors to be Adjust, Patch or Modified for the new hardware as required by the GC. Fill or patch all remaining visible holes or preps by GC.

SET #66 - Auditorium Pr x New Doors x Exit Only

Doors: C112-10, C112-3, C112-4, C112-5, C112-6, C112-7, C112-8, C112-9

2	Continuous Hinge	663HD UL	AL	ST
2	Exit Device	2201 X 4901 CD LBR SNB (6)	630	PR
2	Mortise Cylinder	1037	626	CR
2	Closer	4040 XP SCUSH TBWMS MC	AL	LC
2	Kick Plate	K0050 10" x 1" LDW B4E CSK	630	TR
2	Vertical Rod Cover	BFRC24	US32D	RO
1	Astragal Seal	5070		NA
1	Gasketing	2525 B		NA

NOTE: Frames and doors to be Adjusted, Patched or Modified for the new hardware as required by the GC. Fill or patch all remaining visible holes or preps.

SET #67 - SET NOT USED

Doors:

2	Continuous Hinge	663HD UL	AL	ST
2	Flush Bolt	3917	626	TR
1	Entry Lockset	9K3-0AB15D 7/8" LTC COR-RC LM	626	BE
1	Cylinder Core IC	8027	626	CR
1	Closer	4040 XP SHCUSH TBWMS MC	AL	LC
1	Overhead Stop	9020 Series	US32D	AB
2	Kick Plate	K0050 10" x 1" LDW B4E CSK	630	TR
1	Dustproof Strike	3910	626	TR
1	Astragal Seal	5070		NA
1	Gasketing	2525 B		NA

NOTE: Frames and doors to be Adjusted, Patched or Modified for the new hardware as required by the GC. Fill or patch all remaining visible holes or preps.

SET #68 - Mech Rm x Exist Door

Doors: C103A-1E

1	Continuous Hinge	664HD UL	AL	ST
1	Storeroom Lockset	9K3-0D15D COR-RC LM S3	626	BE
1	Cylinder Core IC	8027	626	CR
1	Wall Bumper	1270CXPV	626	TR
1	Wrap-Around	12 Series as REQ'D	S	DJ
1	Gasketing	2525 B		NA

NOTE: Frames and doors to be Adjusted, Patched or Modified for the new hardware as required by the GC. Fill or patch all remaining visible holes or preps.

SET #69 - Music Lobby x New Doors

Doors: C107D-1

2	Continuous Hinge	663HD UL	AL	ST
2	Pull Plate	1014-3B	630	TR
2	Push Plate	1001-3	626	TR
2	Closer	4040 XP SCUSH TBWMS MC	AL	LC
2	Kick Plate	K0050 10" x 1" LDW B4E CSK	630	TR
1	Astragal Seal	5070		NA
1	Gasketing	2525 B		NA

NOTE: Frames and doors to be Adjusted, Patched or Modified for the new hardware as required by the GC. Fill or patch all remaining visible holes or preps.

SET #70 - Music Office x New Door

Doors: C107-1, C107-2

3	Hinges	FBB173 NRP (Verify Size and Weight in Field)		US26D
3	Back Plates	BP-1	US26D	ST
1	Entry Lockset	9K3-0AB15D COR-RC LM S3	626	BE
1	Cylinder Core IC	8027	626	CR
1	Overhead Stop	9020 Series	US32D	AB
1	Gasketing	2525 B		NA

NOTE: Frames and doors to be Adjusted, Patched or Modified for the new hardware as required by the GC. Fill or patch all remaining visible holes or preps.

SET #71 - Music Practice x New Door

Doors: C107D-2

3	Hinges	FBB173 NRP (Verify Size and Weight in Field)		US26D
3	Back Plates	BP-1	US26D	ST
1	Passage Set	9K3-0N15D S3	626	BE
1	Closer	4040 XP EDA TBWMS MC	AL	LC
1	Overhead Stop	9020 Series	US32D	AB
1	Kick Plate	K0050 10" x 2" LDW B4E CSK	630	TR
1	Gasketing	2525 B		NA

NOTE: Frames and doors to be Adjusted, Patched or Modified for the new hardware as required by the GC. Fill or patch all remaining visible holes or preps.

SET #72 - Band x New Door

Doors: C107E-1

3	Hinges	FBB173 NRP (Verify Size and Weight in Field)		US26D
3	Back Plates	BP-1	US26D	ST
1	Entry Lockset	9K3-0AB15D COR-RC LM S3	626	BE
1	Cylinder Core IC	8027	626	CR
1	Closer	4040 XP EDA TBWMS MC	AL	LC
1	Kick Plate	K0050 10" x 2" LDW B4E CSK	630	TR
1	Wall Bumper	1270CXPV	626	TR
1	Gasketing	2525 B		NA

NOTE: Frames and doors to be Adjusted, Patched or Modified for the new hardware as required by the GC. Fill or patch all remaining visible holes or preps.

SET #73 - Music Practice x New Door

Doors: C105C-1, C107A-1, C107B-1, C107C-1

3	Hinges	FBB173 NRP (Verify Size and Weight in Field)		US26D
3	Back Plates	BP-1	US26D	ST
1	Entry Lockset	9K3-7AB15D COR-RC LM S3	626	BE
1	Cylinder Core IC	8027	626	CR
1	Wall Bumper	1270CXPV	626	TR
1	Sound Gasketing	107 SA @ Head & Jambs		NA
1	Gasketing	137 NA @ Head & Jambs x Torx Screws		NA
1	Auto Door Bottom	420 NA		NA

NOTE: Frames and doors to be Adjusted, Patched or Modified for the new hardware as required by the GC. Fill or patch all remaining visible holes or preps.

SET #74 - Ensemble Room x New Door

Doors: C105B-2

1	Continuous Hinge	663HD UL	AL	ST
1	Entry Lockset	9K3-0AB15D COR-RC LM S3	626	BE
1	Cylinder Core IC	8027	626	CR
1	Closer	4040 XP EDA TBWMS MC	AL	LC
1	Kick Plate	K0050 10" x 2" LDW B4E CSK	630	TR
1	Wall Bumper	1270CXPV	626	TR
1	Gasketing	137 NA @ Head & Jambs x Torx Screws		NA
1	Auto Door Bottom	420 NA		NA

NOTE: Frames and doors to be Adjusted, Patched or Modified for the new hardware as required by the GC. Fill or patch all remaining visible holes or preps.

SET #75 - Ensemble x New Door

Doors: C105B-1

1	Continuous Hinge	663HD UL	AL	ST
1	Classroom Lockset	9K3-0R15D COR-RC LM S3	626	BE

1	Cylinder Core IC	8027	626	CR
1	Overhead Stop	9020 Series	US32D	TR
1	Gasketing	137 NA @ Head & Jambs x Torx Screws		NA
1	Auto Door Bottom	420 NA		NA

NOTE: Frames and doors to be Adjusted, Patched or Modified for the new hardware as required by the GC. Fill or patch all remaining visible holes or preps.

SET #76 - Ensemble x New Door

Doors: C109B-1, C109B-2

1	Continuous Hinge	663HD UL	AL	ST
1	Classroom Lockset	9K3-0R15D COR-RC LM S3	626	BE
1	Cylinder Core IC	8027	626	CR
1	Kick Plate	K0050 10" x 2" LDW B4E CSK	630	TR
1	Wall Bumper	1270CXPV	626	TR
1	Gasketing	137 NA @ Head & Jambs x Torx Screws		NA
1	Auto Door Bottom	420 NA		NA

NOTE: Frames and doors to be Adjusted, Patched or Modified for the new hardware as required by the GC. Fill or patch all remaining visible holes or preps.

SET #77 - Corr Pair x New Doors

Doors: C111-2, C114-2

2	Continuous Hinge	663HD UL	AL	ST
2	Pull Plate	1014-3B	630	TR
2	Push Plate	1001-3	626	TR
2	Closer	4040 XP EDA TBWMS MC	AL	LC
2	Kick Plate	K0050 10" x 1" LDW B4E CSK	630	TR
2	Wall Bumper	1270CXPV	626	TR
2	Door Silencers	1229A	GREY	TR

NOTE: Frames and doors to be Adjusted, Patched or Modified for the new hardware as required by the GC. Fill or patch all remaining visible holes or preps.

SET #78 - Storage x New Door

Doors: C112A-1, C112B-1

3	Hinges	FBB173 NRP (Verify Size and Weight in Field)		US26D
3	Back Plates	BP-1	US26D	ST
1	Storeroom Lockset	9K3-0D15D COR-RC LM S3	626	BE

1	Cylinder Core IC	8027	626	CR
1	Kick Plate	K0050 10" x 2" LDW B4E CSK	630	TR
1	Wall Bumper	1270CXPV	626	TR
3	Door Silencers	1229A	GREY	TR

NOTE: Frames and doors to be Adjusted, Patched or Modified for the new hardware as required by the GC. Fill or patch all remaining visible holes or preps.

SET #79 - Corr Pair x New Doors

Doors: A121-3, A122-3

2	Continuous Hinge	663HD UL	AL	ST
1	Removable Mullion	822	600	PR
1	Exit Device	2114 X 4914A CD SNB (2)	630	PR
1	Exit Device	2102 X 4902A CD SNB (2)	630	PR
2	Mortise Cylinder	1037	626	CR
2	Closer	4040 XP SCUSH TBWMS MC	AL	LC
2	Kick Plate	K0050 10" x 1" LDW B4E CSK	630	TR
1	Mullion Seal	5100N		NA
2	Door Silencers	1229A	GREY	TR

NOTE: Frames and doors to be Adjusted, Patched or Modified for the new hardware as required by the GC. Fill or patch all remaining visible holes or preps.

SET #80 - Gym Pair x New Doors

Doors: A121-1, A122-1

2	Continuous Hinge	663HD UL	AL	ST
1	Removable Mullion	822	600	PR
1	Exit Device	2103 X 4903A CD SNB (2)	630	PR
1	Exit Device	2102 X 4902A CD SNB (2)	630	PR
2	Mortise Cylinder	1037	626	CR
1	Rim Cylinder	3037	626	CR
2	Closer	4040 XP HEDA TBWMS MC	AL	LC
2	Kick Plate	K0050 10" x 2" LDW B4E CSK	630	TR
2	Wall Bumper	1270CXPV	626	TR
1	Mullion Seal	5100N		NA
1	Gasketing	2525 B		NA
1	Saddle Threshold	420 E Series Verify size and width 1/4-20 SSMS/LA		AL

NOTE: Frames and doors to be Adjusted, Patched or Modified for the new hardware as required by the GC. Fill or patch all remaining visible holes or preps.

SET #81 - Corrective Gym x New Doors

Doors: A114-1, A114-2

1	Continuous Hinge	663HD UL	AL	ST
1	Deadlock	48H-0R	626	BE
1	Mortise Cylinder	1037	626	CR
1	Pull Plate	1014-3B	630	TR
1	Push Plate	1001-3	626	TR
1	Closer	4040 XP EDA TBWMS MC	AL	LC
1	Kick Plate	K0050 10" x 2" LDW B4E CSK	630	TR
1	Wall Bumper	1270CXPV	626	TR
3	Door Silencers	1229A	GREY	TR

NOTE: Frames and doors to be Adjusted, Patched or Modified for the new hardware as required by the GC. Fill or patch all remaining visible holes or preps.

SET #82 - Toilet x New Door

Doors: A110C-1, A111B-1

3	Hinges	FBB173 NRP (Verify Size and Weight in Field)		US26D
3	Back Plates	BP-1	US26D	ST
1	Privacy Set	9K3-0L15D S3	626	BE
1	Wall Bumper	1270CVPV	626	TR
3	Door Silencers	1229A	GREY	TR

NOTE: Frames and doors to be Adjusted, Patched or Modified for the new hardware as required by the GC. Fill or patch all remaining visible holes or preps.

SET #83 - Locker Rm / Gym x New Door

Doors: A121-2, A122-2

1	Continuous Hinge	663HD UL	AL	ST
1	Exit Device	2108 X V4908A CD SNB (2)	630	PR
1	Mortise Cylinder	1037	626	CR
1	Rim Cylinder	3037	626	CR
1	Closer	4040 XP SCUSH TBWMS MC	AL	LC
1	Kick Plate	K0050 10" x 2" LDW B4E CSK	630	TR
3	Door Silencers	1229A	GREY	TR
1	Saddle Threshold	420 E Series Verify size and width 1/4-20 SSMS/LA		AL

NOTE: Frames and doors to be Adjusted, Patched or Modified for the new hardware as required by the GC. Fill or patch all remaining visible holes or preps.

SET #84 - Towel Room x Exist Door

Doors: A108E-1E

1	Continuous Hinge	664HD UL	AL	ST

1	Storeroom Lockset	9K3-0D15D COR-RC LM S3	626	BE
1	Cylinder Core IC	8027	626	CR
1	Overhead Stop	9020 Series	US32D	AB
1	Wrap-Around	12 Series as REQ'D	S	DJ
3	Door Silencers	1229A	GREY	TR

NOTE: Frames and doors to be Adjusted, Patched or Modified for the new hardware as required by the GC. Fill or patch all remaining visible holes or preps.

SET #85 - Towel Rm x Exist Door

Doors: A108E-2E

1	Continuous Hinge	664HD UL	AL	ST
1	Deadlock	352 (Verify with existing door prep)	626	YA
1	Mortise Cylinder	1037	626	CR
1	Wall Bumper	1270CXPV	626	TR
3	Door Silencers	1229A	GREY	TR

NOTE: Frames and doors to be Adjusted, Patched or Modified for the new hardware as required by the GC. Fill or patch all remaining visible holes or preps.

SET #86 - Classroom x Exist Door

Doors: A100-1E, A101-1E

1	Continuous Hinge	664HD UL	AL	ST
1	Intruder Lockset	9K3-0IN15D COR-RC LM S3	626	BE
1	Cylinder Core IC	8027	626	CR
1	Cylinder Core IC	8027 (Inside Core)	606	CR
1	Closer	4040 XP SCUSH TBWMS MC	AL	LC
1	Kick Plate	K0050 10" x 2" LDW B4E CSK	630	TR
3	Door Silencers	1229A	GREY	TR

NOTE: Frames and doors to be Adjusted, Patched or Modified for the new hardware as required by the GC. Fill or patch all remaining visible holes or preps.

SET #87 - Drying Area x Existing Door

Doors: A116-2E, A118-2E

1	Continuous Hinge	664HD UL	AL	ST
1	Deadlock	357	626	YA
1	Mortise Cylinder	1037	626	CR
1	Pull Plate	1014-3B	630	TR
1	Push Plate	1001-3	626	TR
1	Closer	4040 XP EDA TBWMS MC	AL	LC
1	Kick Plate	K0050 10" x 2" LDW B4E CSK	630	TR
1	Wall Bumper	1270CXPV	626	TR
3	Door Silencers	1229A	GREY	TR

NOTE: Frames and doors to be Adjusted, Patched or Modified for the new hardware as required by the GC. Fill or patch all remaining visible holes or preps.

SET #88 - Corr x Exist Door

Doors: A123-1E

1	Continuous Hinge	664HD UL	AL	ST
1	Exit Device	2103 CD SNB (2)	626W	PR
1	Rim Cylinder	3037	626	CR
1	Mortise Cylinder	1037	626	CR
1	Anti-Vandal Pull	1097HA SP	630	TR
1	Closer	4040 XP EDA TBWMS MC	AL	LC
1	Kick Plate	K0050 10" x 2" LDW B4E CSK	630	TR
1	Wall Bumper	1270CXPV	626	TR
3	Door Silencers	1229A	GREY	TR

NOTE: Frames and doors to be Adjusted, Patched or Modified for the new hardware as required by the GC. Fill or patch all remaining visible holes or preps.

SET #89 - Corr Pair x Existing Doors

Doors: A123-2E, A126-2E

2	Continuous Hinge	664HD UL	AL	ST
1	Removable Mullion	FL822	600	PR
1	Exit Device	FL 2101 X 4901 SNB (2)	630	PR
1	Exit Device	FL 2103 X 4903A SNB (2)	630	PR
1	Rim Cylinder	3037	626	CR
2	Closer	4040 XP SCUSH TBWMS MC	AL	LC
2	Kick Plate	K0050 10" x 1" LDW B4E CSK	630	TR
1	Astragal Seal	5070		NA
1	Gasketing	2525 B		NA

NOTE: Verify frame condition in field to confirm if replacement needed. Frames and doors to be Adjust, Patch or Modified for the new hardware as required by the GC. Fill or patch all remaining visible holes or preps by GC.

SET #90 - Corr Pair x Existing Doors

Doors: A126-1E

2	Continuous Hinge	664HD UL	AL	ST
1	Removable Mullion	FL822	600	PR
1	Exit Device	FL 2101 X 4901 SNB (2)	630	PR
1	Exit Device	FL 2103 X 4903A SNB (2)	630	PR
1	Rim Cylinder	3037	626	CR
2	Closer	4040 XP EDA TBWMS MC	AL	LC

2	Kick Plate	K0050 10" x 1" LDW B4E CSK	630	TR
2	Wall Bumper	1270CXPV	626	TR
1	Astragal Seal	5070		NA
1	Gasketing	2525 B		NA

NOTE: Frames and doors to be Adjust, Patch or Modified for the new hardware as required by the GC. Fill or patch all remaining visible holes or preps by GC.

SET #91 - Locker x New Door

Doors: A110B-1, A111A-1

1	Continuous Hinge	663HD UL	AL	ST
1	Pull Plate	1014-3B	630	TR
1	Push Plate	1001-9	630	TR
1	Closer	4040 XP EDA TBWMS MC	AL	LC
1	Kick Plate	K0050 10" x 2" LDW B4E CSK	630	TR
1	Wall Bumper	1270CXPV	626	TR
3	Door Silencers	1229A	GREY	TR

NOTE: Frames and doors to be Adjusted, Patched or Modified for the new hardware as required by the GC. Fill or patch all remaining visible holes or preps.

SET #92 - Toilet x New Door

Doors: A105-1, A106-1, C101-1, C102-1, C103-1, C104-1

1	Continuous Hinge	663HD UL	AL	ST
1	Deadlock	48H-0R	626	BE
1	Mortise Cylinder	1037	626	CR
1	Pull Plate	1014-3B	630	TR
1	Push Plate	1001-9	630	TR
1	Closer	4040 XP EDA TBWMS MC	AL	LC
1	Kick Plate	K0050 10" x 2" LDW B4E CSK	630	TR
1	Wall Bumper	1270CXPV	626	TR
3	Door Silencers	1229A	GREY	TR

NOTE: Frames and doors to be Adjusted, Patched or Modified for the new hardware as required by the GC. Fill or patch all remaining visible holes or preps.

SET #93 - Cafe Storage Existing Opng / No Work REQ

Doors: B101B-1E

NOTE: Keep opening as it is now. No Work Required.

SET #94 - Fitness / Headsart x New Door

Doors: A100-2E, A101-2E, B150-1, B150-2

1	Continuous Hinge	663HD UL	AL	ST
1	Exit Device	2103 X 4903A CD SNB (2)	630	PR
1	Mortise Cylinder	1037	626	CR
1	Rim Cylinder	3037	626	CR
1	Closer	4040 XP SCUSH TBWMS MC	AL	LC
1	Kick Plate	K0050 10" x 2" LDW B4E CSK	630	TR
3	Door Silencers	1229A	GREY	TR

NOTE: Frames and doors to be Adjusted, Patched or Modified for the new hardware as required by the GC. Fill or patch all remaining visible holes or preps.

SET #95 - Choral x New Door

Doors: C105D-1, C105D-2

1	Continuous Hinge	663HD UL	AL	ST
1	Exit Device	2103 X 4903A CD SNB (2)	630	PR
1	Mortise Cylinder	1037	626	CR
1	Rim Cylinder	3037	626	CR
1	Closer	4040 XP EDA TBWMS MC	AL	LC
1	Kick Plate	K0050 10" x 2" LDW B4E CSK	630	TR
1	Wall Bumper	1270CXPV	626	TR
3	Door Silencers	1229A	GREY	TR

NOTE: Frames and doors to be Adjusted, Patched or Modified for the new hardware as required by the GC. Fill or patch all remaining visible holes or preps.

SET #96 - Janitor x New Door

Doors: B109-1, B115-1, B217-1, B225-1, B317-1, B329A-1

1	Continuous Hinge	663HD UL	AL	ST
1	Storeroom Lockset	9K3-0D15D COR-RC LM S3	626	BE
1	Cylinder Core IC	8027	626	CR
1	Overhead Stop	9020 Series	US32D	AB
3	Door Silencers	1229A	GREY	TR

NOTE: Frames and doors to be Adjusted, Patched or Modified for the new hardware as required by the GC. Fill or patch all remaining visible holes or preps.

END OF SECTION 08 7100

SECTION 10 1423 - PANEL SIGNAGE **ADDENDUM 2**

PART 1 - GENERAL

1.1 RELATED DOCUMENTS

A. Drawings and general provisions of the Contract, including General and Supplementary Conditions and Division 01 Specification Sections, apply to this Section.

1.2 SUMMARY

A. Section Includes:

1. Interior room-identification signs.
2. Interior informational signs.

1.3 ACTION SUBMITTALS

A. Product Data: For each type of product.

B. Shop Drawings: For panel signs.

1. Include fabrication and installation details and attachments to other work.
2. Show sign mounting heights, locations of supplementary supports to be provided by others, and accessories.
3. Show message list, typestyles, graphic elements, including raised characters and Braille, and layout for each sign at least half size.

C. Samples: For each exposed product and for each color and texture specified.

D. Sign Schedule: Use same designations specified or indicated on Drawings or in a sign schedule.

1.4 INFORMATIONAL SUBMITTALS

A. Sample warranty.

1.5 CLOSEOUT SUBMITTALS

A. Maintenance data.

1.6 WARRANTY

A. Special Warranty: Manufacturer agrees to repair or replace components of signs that fail in materials or workmanship within specified warranty period.

1. Warranty Period: Five years from date of Substantial Completion.

PART 2 - PRODUCTS

2.1 INTERIOR ROOM SIGNS

A. Basis-of-Design Product: Subject to compliance with requirements, provide signs manufactured by iSign Inc. or comparable product by one of the following:

1. ASE, Inc.
2. Advance Corporation; Braille-Tac Division.
3. ASI Sign Systems, Inc.
4. InPro Corporation; SignScape Signage and Wayfinding.
5. Mohawk Sign Systems.
6. Seton Identification Products.

B. Provide a sign for every door, an entry and exit sign at every exterior door and 25 directional signs. Coordinate locations with owner/architect.

C. Signs: Acrylic, laser-etched to produce raised text, **symbols** and braille; ~~8 x 8 inch~~ **size as noted on A910, 90 degree corners** ~~1/2 inch radius corners~~; ~~1 inch high slip-in~~.

D. Lettering: Color and position as selected; ~~Helvetica~~ **Stymie Bold** style, characters raised 1/32 inch.

1. Room numbers~~ and room names 5/8 inch high upper case text~~, 1 **1/2** inch high numerals.
2. Room ~~occupant~~ names **with number** 1/2 inch high upper ~~and lower~~ case.
3. **Stairway signs 1/2 inch high upper case.**

E. Backplate Color: As selected.

F. Braille: Provide Grade 2 Braille translation of printed text.

G. Pictograms: Provide pictograms for toilet rooms ~~and stair entry doors~~.

H. Provide room numbers and room names at each entrance to each room as shown on the Drawings if not indicated on Drawings as directed by Architect.

I. Mounting: Surface mounted to wall with **mechanical fasteners** ~~two-face tape~~.

J. Mounting on glass: Provide blank sign on interior side of room where sign is mounted on glass.

K. Provide code compliant “EXIT” signage at all Exit locations.

2.2 INTERIOR INFORMATIONAL SIGNS

A. Basis-of-Design Product: Subject to compliance with requirements, provide **Vinyl Graphic** signs **as indicated in specification section 09 7201**. ~~manufactured by iSign Inc. or comparable product by one of the following~~:

~~1. ASE, Inc.~~
~~2. Advance Corporation; Braille-Tac Division.~~
~~3. ASI Sign Systems, Inc.~~
~~4. InPro Corporation; SignScape Signage and Wayfinding.~~
~~5. Mohawk Sign Systems.~~
~~6. Seton Identification Products.~~

B. Refer to **A812 for Inside Corner Locations at Corridors**. ~~Drawings for areas requiring signage~~. **Provide vinyl wall graphic with wayfinding. Final text to be confirmed with Owner.**

C. ~~Signs: Plastic subsurface printed on 1/16 inch thick clear matte acrylic and laminated to 1/8 inch thick acrylic backplate; size required for message, 1/2 inch radius corners.~~

D. ~~Lettering: Futura style, minimum 5/8 inch high upper case text. Color and position as selected.~~

E. ~~Backplate Color: A selected.~~

F. Mounting~~: Surface mounted to wall with two-face tape.~~ **Per Vinyl Graphic manufacturer.**

2.3 ACCESSORIES

~~Two-Face Tape: Manufacturer's standard high-bond, foam-core tape, 0.045 inch thick, with adhesive on both sides.~~

A. Concealed mount, mechanical fasteners.

PART 3 - EXECUTION

3.1 INSTALLATION

A. General: Install signs using mounting methods indicated and according to manufacturer's written instructions.

1. Install signs level, plumb, true to line, and at locations and heights indicated, with sign surfaces free of distortion and other defects in appearance.
2. Install signs so they do not protrude or obstruct according to the accessibility standard.
3. Before installation, verify that sign surfaces are clean and free of materials or debris that would impair installation.

B. Mounting Methods:

1. Shim Plate Mounting: Provide 1/8-inch-thick concealed aluminum shim plates with predrilled and countersunk holes, at locations indicated, and where other mounting methods are not practicable. Attach the plate with fasteners and anchors suitable for secure attachment to the substrate. Attach panel sign units to the plate using the method specified above.

~~1. Two-Face Tape: Clean bond-breaking materials from substrate surface and remove loose debris. Apply tape strips symmetrically to back of sign and of suitable quantity to support weight of sign without slippage. Keep strips away from edges to prevent visibility at sign edges. Place sign in position, and push to engage tape adhesive.~~

C. Remove temporary protective coverings and strippable films as signs are installed.

END OF SECTION 10 1423

SECTION 10 2800 - TOILET AND BATH ACCESSORIES **ADDENDUM 2**

PART 1 - GENERAL

1.1 RELATED DOCUMENTS

A. Drawings and general provisions of the Contract, including General and Supplementary Conditions and Division 01 Specification Sections, apply to this Section.

1.2 SUMMARY

A. Section Includes:

1. Washroom accessories (provide where missing in existing toilet rooms).

2. Grab bars.

1.3 ACTION SUBMITTALS

A. Product Data: For each type of product indicated. Include the following:

1. Construction details and dimensions.
2. Anchoring and mounting requirements.
3. Material and finish descriptions.
4. Manufacturer's warranty.

B. Samples: Full size, for each accessory item to verify design, operation, and finish requirements.

1. Approved full-size Samples will be returned and may be used in the Work.

C. Product Schedule: Indicating types, quantities, sizes, and installation locations by room of each accessory required.

1. Identify locations using room designations indicated.
2. Identify products using designations indicated.

1.4 INFORMATIONAL SUBMITTALS

A. Warranty: Sample of special warranty.

1.5 CLOSEOUT SUBMITTALS

A. Maintenance Data: For toilet and bath accessories to include in maintenance manuals.

1.6 QUALITY ASSURANCE

A. Source Limitations: For products listed together in the same Part 2 articles, obtain products from single source from single manufacturer.

1.7 COORDINATION

A. Coordinate accessory locations with other work to prevent interference with clearances required for access by people with disabilities, and for proper installation, adjustment, operation, cleaning, and servicing of accessories.

B. Deliver inserts and anchoring devices set into concrete or masonry as required to prevent delaying the Work.

PART 2 - PRODUCTS

2.1 MATERIALS

A. Stainless Steel: ASTM A 666, Type 304, 0.031-inch minimum nominal thickness unless otherwise indicated.

B. Fasteners: Screws, bolts, and other devices of same material as accessory unit and tamper-and-theft resistant where exposed, and of galvanized steel where concealed.

C. Mirrors: ASTM C 1503, Mirror Glazing Quality, clear-glass mirrors, nominal 6.0 mm thick.

2.2 TOILET AND BATH ACCESSORIES

A. Student & Public Toilet Rooms:

1. Soap Dispenser: ~~Bobrick Model B-2112.~~**Kimberly Clark Professional Cassette Skin Care Dispenser**. **Owner provided, contractor installed.**

2. Toilet Paper Dispenser: ~~ASI Model #0030~~. **Kimberly Clark JRT Jr. Escort Jumbo Roll Bathroom Tissue Dispenser**. **Owner provided, contractor installed.**

3. Paper Towel Dispenser: ~~ASI Model #8522~~. **Kimberly Clark MOD Manual Hard Roll Towel Dispenser**. **Owner provided, contractor installed.**

4. Waste Receptacle:40 gallon stainless steel or wire mesh, free standing receptacle.

B. Faculty & Staff Private Toilet Rooms:

1. Soap Dispenser: ~~Bobrick Model B-2112~~.**Kimberly Clark Professional Cassette Skin Care Dispenser**. **Owner provided, contractor installed.**

2. Toilet Paper Dispenser: ~~ASI Model #0263-1~~. **Kimberly Clark JRT Jr. Escort Jumbo Roll Bathroom Tissue Dispenser**. **Owner provided, contractor installed.**

3. Paper Towel Dispenser: ~~ASI Model #8522~~. **Kimberly Clark MOD Manual Hard Roll Towel Dispenser**. **Owner provided, contractor installed.**

4. Waste Receptacle:40 gallon stainless steel or wire mesh, free standing receptacle.
5. Grab bars: ASI Model #3200 (contractor to de-burr all fasteners).

2.3 UNDER LAVATORY GUARDS

A. Manufacturers: Subject to compliance with requirements, available manufacturers offering products that may be incorporated into the Work include, but are not limited to, the following:

1. IPS Corporation; Truebro® Lav Guard 2 Series.
2. Plumberex Specialty Products, Inc.; Pro-Extreme.

2.4 FABRICATION

A. General: Fabricate units with tight seams and joints, and exposed edges rolled. Hang doors and access panels with full-length, continuous hinges. Equip units for concealed anchorage and with corrosion-resistant backing plates.

B. Keys: Provide universal keys for internal access to accessories for servicing and resupplying. Provide minimum of six keys to Owner's representative.

PART 3 - EXECUTION

3.1 INSTALLATION

A. Install accessories according to manufacturers' written instructions, using fasteners appropriate to substrate indicated and recommended by unit manufacturer. Install units level, plumb, and firmly anchored in locations and at heights indicated.

B. Grab Bars: Install to withstand a downward load of at least 250 lbf, when tested according to ASTM F 446.

3.2 ADJUSTING AND CLEANING

A. Adjust accessories for unencumbered, smooth operation. Replace damaged or defective items.

B. Remove temporary labels and protective coatings.

C. Clean and polish exposed surfaces according to manufacturer's written recommendations.

END OF SECTION 10 2800

SECTION 14 2400 – ELEVATOR MODERNIZATION **ADDENDUM 2**

PART 1 - GENERAL

1.1 RELATED DOCUMENTS

A. Drawings and general provisions of the Contract, including General and Supplementary Conditions and Division 01 Specification Sections, apply to this Section.

1.2 SUMMARY

A. Section includes modernization of existing hydraulic passenger elevator and replacement of existing elevator cab, single bottom cylinder, controller and troughs.

1.3 DEFINITIONS

A. Definitions in ASME A17.1/CSA B44 apply to work of this Section.

1.4 ACTION SUBMITTALS

A. Product Data: Include capacities, sizes, performances, operations, safety features, finishes, and similar information. Include product data for car enclosures, hoistway entrances, and operation, control, and signal systems.

B. Shop Drawings:

1. Include plans, elevations, sections, and large-scale details indicating service at each landing, machine room layout, coordination with building structure, relationships with other construction, and locations of equipment.
2. Include large-scale layout of car-control station.
3. Indicate maximum dynamic and static loads imposed on building structure at points of support, and maximum and average power demands.

C. Samples for Initial Selection: For finishes involving color selection.

D. Samples for Verification: For exposed car, hoistway door and frame, and signal equipment finishes; 3-inch square Samples of sheet materials; and 4-inch lengths of running trim members.

1.5 INFORMATIONAL SUBMITTALS

A. Qualification Data: For Installer.

B. Manufacturer Certificates: Signed by elevator manufacturer certifying that hoistway, pit, and machine room layout and dimensions, as shown on Drawings, and electrical service, as shown and specified, are adequate for elevator system being provided.

C. Sample Warranty: For special warranty.

1.6 CLOSEOUT SUBMITTALS

A. Operation and Maintenance Data: For elevators to include in emergency, operation, and maintenance manuals.

B. Inspection and Acceptance Certificates and Operating Permits: As required by authorities having jurisdiction for normal, unrestricted elevator use.

C. Continuing Maintenance Proposal: Submit a continuing maintenance proposal from Installer to Owner, in the form of a standard two-year maintenance agreement, starting on date initial maintenance service is concluded. State services, obligations, conditions, and terms for agreement period and for future renewal options.

1.7 QUALITY ASSURANCE

A. Installer Qualifications: Elevator manufacturer or an authorized representative who is trained and approved by manufacturer.

1.8 DELIVERY, STORAGE, AND HANDLING

A. Deliver, store, and handle materials, components and equipment in manufacturer's protective packaging. Store materials, components, and equipment off of ground, under cover, and in a dry location.

1.9 COORDINATION

A. Coordinate installation of sleeves, block outs, elevator equipment with integral anchors, and other items that are embedded in concrete or masonry for elevator equipment. Furnish templates, sleeves, elevator equipment with integral anchors, and installation instructions and deliver to Project site in time for installation.

B. Furnish well casing and coordinate delivery with related excavation work.

C. Coordinate locations and dimensions of other work relating to hydraulic elevators including pit ladders; sumps and floor drains in pits; entrance subsills; electrical service; and electrical outlets, lights, and switches in hoistways, pits, and machine rooms.

PART 2 - PRODUCTS

2.1 MANUFACTURERS

A. Basis-of-Design: Subject to compliance with requirements, provide modernization by Otis Elevator Company or comparable service by one of the following:

1. KONE Inc.
2. Schindler Elevator Corp.
3. ThyssenKrupp Elevator.

2.2 PERFORMANCE REQUIREMENTS

A. Regulatory Requirements: Comply with ASME A17.1/CSA B44.

B. Accessibility Requirements: Comply with Section 407 in the U.S. Architectural & Transportation Barriers Compliance Board's ADA-ABA Accessibility Guidelines and with ICC A117.1.

C. Seismic Performance: Elevator system shall withstand the effects of earthquake motions determined according to ASCE/SEI 7 and shall comply with elevator safety requirements for seismic risk Zone 1 or greater in ASME A17.1/CSA B44.

1. The term "withstand" means "the system will remain in place without separation of any parts when subjected to the seismic forces specified and the system will be fully operational after the seismic event."
2. Provide earthquake equipment required by ASME A17.1/CSA B44.
3. Project's Seismic Design Category: As indicated on Drawings.
4. Elevator Component Importance Factor: 1.0.

2.3 ELEVATORS

A. Elevator System, General: Provide manufacturer’s standard non-proprietary pre-engineering micro-processor controlled elevator system that will comply with or fulfill requirements. Where components are not otherwise indicated, provide standard components published by manufacturer as included in standard pre-engineered elevator systems and as required for a complete system.

B. Elevator Description:

1. Type: Retain existing elevator type classification
2. Rated Load: Retain 3500 lb.
3. Rated Speed: 100 fpm.
4. Operation System: Selective Collective Operation.
5. Auxiliary Operations:

   a. Automatic 2-way leveling.
   b. New Emergency Return Unit. This unit shall allow the elevator to return to the lowest landing in case of power outage.
   c. Fire Service Phase I & II.

d. Emergency Car Lighting.
e. Top of Car Inspection.
f. ADA Compliant Phone.

6. Car Enclosures (new cab enclosure):

a. Inside Width: Retain existing.
b. Inside Depth: Retain existing.
c. Inside Height: Retain existing.
d. Front Walls (Return Panels): Satin stainless steel, No. 4 finish with integral car door frames.
e. Car Fixtures: Satin stainless steel, No. 4 finish.
f. Side and Rear Wall Panels: Satin stainless steel, No. 4 finish.
g. Reveals: Satin stainless steel, No. 4 finish.
h. Door Faces (Interior): Satin stainless steel, No. 4 finish.
i. Door Sills: Aluminum, mill finish.
j. Ceiling: LED Perimeter Ceiling, stainless steel.
k. Handrails: Satin stainless steel, No. 4 finish at sides and rear of car. Flat profile.
l. Floor prepared to receive resilient flooring specified in Section 096500 "Resilient Flooring".

7. Hoistway Entrances:

a. Retain at all floors.
b. Frames: Painted Steel. **Repair and straighten existing frames as necessary to appear as new. Repaint frames at all floors.**
c. Doors: Replace all hoistway doors including tracks, locks and hangers. Adjust for smooth and quiet operation.
d. Sills: Aluminum, mill finish.

8. Hall Fixtures: Satin stainless steel, No. 4 finish.
9. Additional Requirements:

a. Provide inspection certificate in each car, mounted under acrylic cover with frame made from satin stainless steel, No. 4 finish.

2.4 SYSTEMS AND COMPONENTS

A. Pump Units: Retain existing or replace as required to complete elevator modernization.

B. Oil Tank: Replace and reinstall with a scavenger pump.

C. Hydraulic Machine and Elevator Equipment: Replace existing passenger elevator electric motor-pump-tank-starter system equipment in machine room.

D. Hydraulic Silencers: System shall have hydraulic silencer containing pulsation-absorbing material in blowout-proof housing at pump unit.

E. Piping: Replace existing to meet elevator controller manufacturer's specifications and code requirements. Provide size, type, and weight piping recommended by manufacturer and provide isolation couplings to prevent sound/vibration transmissions from power unit.

F. Hydraulic Fluid: Nontoxic, biodegradable fluid made from vegetable oil with antioxidant, anticorrosive, antifoaming, and metal-passivating additives and approved by elevator manufacturer for use with elevator equipment.

1. Product: Subject to compliance with requirements, provide "Hydro Safe" by Hydro Safe Oil Division, Inc.

G. Inserts: Retain existing required concrete inserts and similar anchorage devices for the support of guide rails, machinery, and other components or elevator work. If required, modify, adjust or replace to accommodate the installation or operation of all new equipment.

H. Jack Cylinder: Replace existing single bottom cylinder with new sectional shaft within a sealed PVC case with an evacuation port.

I. Car Frame and Platform: Retain existing with any modifications to accept any new equipment attached thereto.

J. Guides: Retain existing car guides. Replace worn or damaged components to bring to a "like new" state. Adjust for proper smooth operation.

K. Traveling Cable: Replace with new in conformance with NEC Code.

L. Power: Retain 480v, 3 phase 60 hz.

M. Machine: New tank, muffler, submersible pump and motor.

N. Control Valve: Replace with new Maxton valve.

O. Machine Room: Retain. Contractor to maintain all code requirements and clearances around the equipment.

P. Door Operators: Provide new closed loop "black belt" door operator

Q. Elevator pit: clean and paint with new stop switch installed.

2.5 OPERATION SYSTEMS

A. General: Provide manufacturer's standard microprocessor operation system as required to provide type of operation indicated.

B. Auxiliary Operations: In addition to primary control system features, provide the following controls or operations for passenger elevators, except where otherwise indicated:

1. Automatic 2-way leveling: The leveling device shall automatically stop and maintain car within ½" of landing after one minute without use.
2. New Emergency Return Unit: This unit shall allow the elevator to return to the lowest landing in case of power outage.
3. Fire Service Phase I & II: Automatic Phase 1 activation triggered by fire alarm device with Phase II key switch override.
4. Emergency Car Lighting: In the event of a power failure, the car lights shall automatically transfer to battery power.
5. Top of Car Inspection: Provide control panel with emergency lighting allowing removal of cab from normal service for inspection purposes.
6. ADA compliant phone: Locate phone no more than 48" from cab floor. Phone to be hearing aid compatible with push button controls. Phone must include a visual indicator and transmit a digital identifier code.

2.6 DOOR REOPENING DEVICES

A. Infrared Array: Provide door reopening device with uniform array of 36 or more microprocessor-controlled, infrared light beams projecting across car entrance. Interruption of one or more light beams shall cause doors to stop and reopen.

2.7 CAR ENCLOSURES

A. General: Remove existing cab enclosure and install new flat panel stainless steel cab which will include lighting, suspended ceiling with perimeter lighting, 2-speed fan, stainless steel car doors and front returns with new handrail on rear wall.

B. Materials and Finishes: Manufacturer's standards, but not less than the following:

1. Subfloor: Exterior, underlayment grade plywood, not less than 5/8 nominal thickness.
2. Floor Finish: VCT, as selected by Architect.
3. Fabricate car with recesses and cutouts for signal equipment.
4. Fabricate car door frame integrally with front wall of car.
5. Stainless-Steel Doors: Flush, hollow-metal construction; fabricated from stainless-steel sheet or by laminating stainless-steel sheet to exposed faces and edges of enameled cold-rolled steel doors using adhesive that fully bonds metal to metal without telegraphing or oil-canning.
6. Sills: Extruded metal, with grooved surface, 1/4 inch thick.
7. Stainless Steel Ceiling: LED light fixtures and ceiling panels of stainless steel.
8. Handrails: Manufacturer's standard handrails, of shape, metal, and finish indicated.

2.8 HOISTWAY ENTRANCES

A. Hoistway Entrance Assemblies: Retain at all floors.

B. Fire-Rated Hoistway Entrance Assemblies: Door and frame assemblies shall comply with NFPA 80 and be listed and labeled by a testing and inspecting agency acceptable

to authorities having jurisdiction based on testing at as close-to-neutral pressure as possible according to NFPA 252.

1. Fire-Protection Rating: As indicated on Drawings

2.9 SIGNAL EQUIPMENT

A. General: Provide signal equipment for elevator to comply with requirements below.

B. Car-Control Stations: Provide car control station with flush-mounted metal faceplate containing call button for each landing served and Door Open/Close buttons, emergency stop keyed switch, and controls required for specified car operation. Provide operating device symbols and text as required by code and incorporate Braille Signage where required. Mark other buttons and switches with manufacturer's standard identification for required use of function.

1. Mark buttons and switches for required use or function. Use both tactile symbols and Braille.
2. Provide "No Smoking" sign matching car-control station, either integral with car-control station or mounted adjacent to it, with text and graphics as required by authorities having jurisdiction.

C. Emergency Communication System: Two-way voice communication system, with visible signal, which dials preprogrammed number of monitoring station and does not require handset use. System is contained in flush-mounted cabinet, with identification, instructions for use, and battery backup power supply.

D. Car-Top Alarm: Switches on top emergency exits that will cause alarm to sound when cover is opened.

E. Alarm System: New emergency alarm bell properly located within building and audible outside hoistways, equipped to sound automatically in response to emergency stops and in response to new "Alarm" button on each car control station.

F. Car Position Indicator: Provide illuminated, digital-type car position indicator, located above car door or above car-control station. Also, provide audible signal to indicate to passengers that car is either stopping at or passing each of the floors served. Include travel direction arrows if not provided in car-control station.

G. Hall Push-Button Stations: Provide one hall push-button station with car call key switch at each landing. Fire Service Phase I key switch incorporated in main egress fixture.

1. Provide units with flat faceplate for mounting with body of unit recessed in wall.
2. Equip units with buttons for calling elevator and for indicating applicable direction of travel.

H. Hall Key Switch: Spring-loaded; match school district's standard barrel key - #6304.

I. Hall Lanterns: Units with illuminated arrows; but provide single arrow at terminal landings. Provide the following:

1. Manufacturer's standard wall-mounted units, for mounting above entrance frames.

J. Hall Position Indicators: Provide digital-display-type position indicators, located above hoistway entrance at ground floor. Provide units with flat faceplate for mounting and with body of unit recessed in wall.

2.10 PERSONAL PROTECTIVE DEVICES

A. Electronic Door Detection Device: One new electronic infra-red door reversal device with zone of detection that moves with doors.

B. Nudging Feature: After car doors are prevented from closing for a predetermined, adjustable time period, through activation of detection device or door edge protective device, a loud buzzer shall sound and doors shall begin to close at reduced speed, as required by code.

2.11 DOOR EQUIPMENT

A. General: Replace all hardware including gibs, hangers, tracks, rollers, clutches, etc. for smooth and quiet operation. Make all necessary modifications, repairs and adjustments for smooth, quiet, reliable, and safe operation.

1. Interlocks: All new GAL.
2. Closers: All new GAL and adjusted for proper operation.
3. New GAL digital closed loop operator with the following features:

   a. ½ hp motor and heavy duty sprocket, chain, belt, and sheaves.
   b. Closed loop regulated speed performance.
   c. Hand-held keypad programming.
   d. Adjustments can be stored in the keypad and downloaded to another operator.
   e. Adjustable door obstruction reversal.
   f. Test switches for open, close, nudging and speed zone set up.
   g. Universal inputs for open, close, and nudging.
   h. Optical cams with LED indicators.

2.12 PUMP UNIT

A. General: Submersible style pump/motor (3 phase) unit with Maxton valve.

1. Installed with a scavenger pump.

2.13 FINISH MATERIALS

A. General: Provide the following materials for exposed parts of elevator car enclosures, car doors, hoistway entrance doors and frames, and signal equipment as indicated.

B. Cold-Rolled Steel Sheet: ASTM A 1008/A 1008M, commercial steel, Type B, exposed, matte finish.

C. Hot-Rolled Steel Sheet: ASTM A 1011/A 1011M, commercial steel, Type B, pickled.

D. Stainless-Steel Sheet: ASTM A 240/A 240M, Type 304.

PART 3 - EXECUTION

3.1 EXAMINATION

A. Examine elevator areas, with Installer present, for compliance with requirements for installation tolerances and other conditions affecting performance of the Work. Verify critical dimensions and examine supporting structure and other conditions under which elevator work is to be installed.

B. Prepare written report, endorsed by Installer, listing conditions detrimental to performance of the Work.

C. Proceed with installation only after unsatisfactory conditions have been corrected.

3.2 INSTALLATION

A. Comply with manufacturer's instructions and recommendations for work required during installation. Comply with all applicable Federal, State and local laws and ordinances.

B. Coordination: Coordinate elevator work with other trades for proper time and sequence to avoid construction delays. Use benchmarks, lines and levels designated by Contractor to ensure dimensional coordination of the work.

C. Welded Construction: Provide welded connections for installing elevator work where bolted connections are not required for subsequent removal or for normal operation, adjustment, inspection, maintenance, and replacement of worn parts. Comply with AWS workmanship and welding operator qualification standards.

D. Sound Isolation: Where applicable, mount rotating and vibrating equipment on vibration-isolating mounts to minimize vibration transmission to structure and structure-borne noise due to elevator system.

E. Install piping to replace existing to meet current code.

F. Lubricate operating parts of systems as recommended by manufacturers.

G. Alignment: Adjust, reinforce, and re-secure, if required, elevator guide rails for accurate alignment.

H. Leveling Tolerance: 1/4 inch, up or down, regardless of load and travel direction.

I. Sills: All tracks shall be cleaned of surface dirt and dust.

J. Door opening time: Seconds from start to opening to fully open:

1. 2.1 seconds.

K. Door close time: 3.3 seconds, but not greater than ASME A17.1.

L. Door Dwell time: < 3 seconds. Adjustable from 0-5 seconds.

M. Speed: +/- 2% if contract speed under and loading condition: 100 FPM.

N. % of Hall calls answered within 10 seconds: no less than 75%.

O. % of Hall calls answered within 15 seconds: no less than 98%.

P. Nominal Acceleration: Shall be 2.5'/sec with initial ramp between 0.5 and 0.75 second. Horizontal acceleration with cars during all riding and door operating conditions. Not more than 15 mg in the 1-10 Hz range.

Q. Sustained Jerk: Not more than 35 feet/second.

R. Capacity: Safely lower, stop and hold up to 135%.

S. Stopping accurancy: Maintain +1/4" under and loading condition.

T. Floor to floor performance time: Seconds from start of doors closing until doors are ¾ open and car level and stopped at next successive floor under and loading condition or travel direction 14'-0" typical floor height:

1. Elevator No. 1: <9 seconds.

3.3 HOISTWAY PIT

A. General: Fill any holes or unevenness of the pit floor. Clean, paint floor (gray) and pit equipment (black). Paint a refuge area 36" high by 32" wide by 48" long (yellow).

1. Install new pit ladder.
2. Remove existing and install new Emergency Stop Switch.
3. **Elevator Installer to** Remove existing and install new Pit Light and Switch.

a. Light fixture: 4 foot, (1) Lamp Fluorescent Strip light with wire guard, T-8 lamp and 120 volt electronic ballast.

1). Lithonia C-132 series.
2). Metalux SS-132 series.
3). Williams 76-4-132OC-WG series.

b. Provide GFCI receptacle.

4. Paint pit floor and refuge areas with contrasting colors as indicated.

3.4 JACK UNIT / WELL HOLE

A. Excavation for Jack: verify if required, after removing existing plunger and cylinder in the elevator pit, elevator contractor shall check to accommodate plumb installation of the new PVC encased plunger/cylinder unit. Retain casing and waterproof seals at pit floor and with waterproof, high pressure seal at bottom of existing casings. Any water or fluids, loose muds, etc. shall be pumped out and properly removed from the site by the elevator contractor. The contractor will be responsible for the proper removal of the spoils. The contractor shall be responsible for all old hydraulic tank and cylinder fluid removal and disposal.

B. PVC Encased Piston:

1. As required, re-drill excavation well hole.
2. As required, install new casings with seals and evacuation port.

3.5 FIELD QUALITY CONTROL

A. Acceptance Testing: On completion of elevator installation and before permitting elevator use (either temporary or permanent), perform acceptance tests as required and recommended by ASME A17.1/CSA B44 and by governing regulations and agencies.

B. Advise Owner, Architect, and authorities having jurisdiction in advance of dates and times that tests are to be performed on elevators.

3.6 PROTECTION

A. Temporary Use: Use of elevator for construction purposes is not permitted:

3.7 DEMONSTRATION

A. Engage a factory-authorized service representative to train Owner's maintenance personnel to operate, adjust, and maintain elevator(s).

B. Check operation of elevator with Owner's personnel present before date of Substantial Completion and again not more than one month before end of warranty period. Determine that operation systems and devices are functioning properly.

END OF SECTION 14 2401

DEMOLITION NOTES

1. ALL DEMOLITION ACTIVITIES ARE TO BE PERFORMED IN ACCORDANCE WITH THESE PLANS AND SPECIFICATIONS AS WELL AS ALL FEDERAL, STATE AND LOCAL REGULATIONS. ANY DISCREPANCIES OR DEVIATIONS IDENTIFIED BY THE CONTRACTOR SHALL BE REPORTED TO THE ENGINEER IN WRITING FOR RESOLUTION PRIOR TO INITIATION OF ACTIVITY.
2. THE FIRM OR ENGINEER OF RECORD IS NOT RESPONSIBLE FOR JOB SITE SAFETY OR SUPERVISION. CONTRACTOR IS TO PROCEED WITH THE DEMOLITION IN A SYSTEMATIC AND SAFE MANNER, FOLLOWING ALL THE OSHA REQUIREMENTS AND OTHER FEDERAL, STATE, AND LOCAL REGULATIONS, TO ENSURE THE PUBLIC AND CONTRACTOR SAFETY.
3. PRIOR TO STARTING ANY DEMOLITION CONTRACTOR IS RESPONSIBLE FOR/TO:
   - A. ENSURE COPIES OF ALL PERMITS AND APPROVALS ARE ON SITE FOR REVIEW.
   - B. THE REQUIRED SOIL EROSION AND SEDIMENT CONTROL MEASURES SHALL BE IN PLACE PRIOR TO SITE DISTURBANCE.
   - C. ALL EXISTING UTILITIES AND SERVICES, INCLUDING BUT NOT LIMITED TO GAS, WATER, ELECTRIC, SANITARY AND STORM SEWER, TELEPHONE, CABLE, FIBER OPTIC CABLE, ETC. WITHIN THE LIMITS OF DISTURBANCE, SHALL BE VERTICALLY AND HORIZONTALLY LOCATED. THE CONTRACTOR SHALL USE AND COMPLY WITH THE REQUIREMENTS OF THE APPLICABLE UTILITY NOTIFICATION SYSTEM TO LOCATE ALL THE UNDERGROUND UTILITIES.
   - D. PROTECT AND MAINTAIN IN OPERATION, ALL ACTIVE SYSTEMS THAT ARE NOT BEING REMOVED DURING DEMOLITION ACTIVITIES.
   - E. FAMILIARIZE THEMSELVES WITH THE APPLICABLE UTILITY SERVICE PROVIDER REQUIREMENTS AND IS RESPONSIBLE FOR ALL COORDINATION REGARDING UTILITY DEMOLITION AND RELOCATION AS IDENTIFIED OR REQUIRED FOR PROJECT. THE CONTRACTOR SHALL PROVIDE THE OWNER WRITTEN NOTIFICATION THAT THE EXISTING UTILITIES AND SERVICES HAVE BEEN TERMINATED AND ABANDONED IN ACCORDANCE WITH JURISDICTION AND UTILITY COMPANY REQUIREMENTS.
   - F. COORDINATE WITH UTILITY COMPANIES REGARDING WORKING "OFF-PEAK" HOURS OR ON WEEKENDS AS MAY BE REQUIRED TO MINIMIZE THE IMPACT OF THE AFFECTED PARTIES.
   - G. A COMPLETE INSPECTION FOR CONTAMINANTS, BY A LICENSED ENVIRONMENTAL TESTING AGENCY, OF ALL BUILDINGS AND/OR STRUCTURES TO BE REMOVED SHALL BE DONE IN ACCORDANCE WITH ALL APPLICABLE LOCAL, STATE, AND FEDERAL ENVIRONMENTAL REGULATIONS. ALL CONTAMINANTS SHALL BE REMOVED AND DISPOSED OF BY A FEDERALLY LICENSED CONTRACTOR IN ACCORDANCE WITH FEDERAL, STATE, AND LOCAL REGULATIONS. ALL ENVIRONMENTAL WORK INCLUDING HAZARDOUS MATERIAL, SOILS, ASBESTOS, OR OTHER REFERENCED OR IMPLIED HEREIN IS SOLELY THE RESPONSIBILITY OF THE OWNER'S ENVIRONMENTAL CONSULTANT.
4. THE CONTRACTOR SHALL PROVIDE ALL THE "MEANS AND METHODS" NECESSARY TO PREVENT MOVEMENT, SETTLEMENT, OR COLLAPSE OF EXISTING STRUCTURES AND ANY OTHER IMPROVEMENTS TO REMAIN ON OR OFF SITE.
5. IN ABSENCE OF SPECIFIC SPECIFICATION, THE CONTRACTOR SHALL PERFORM EARTH MOVING ACTIVITIES, DEMOLITION AND REMOVAL OF ALL FOUNDATION WALLS, FOOTINGS, AND OTHER MATERIALS WITHIN THE LIMITS OF DISTURBANCE IN ACCORDANCE WITH DIRECTION BY OWNER'S GEOTECHNICAL ENGINEER.
6. EXPLOSIVES SHALL NOT BE USED WITHOUT PRIOR WRITTEN CONSENT OF BOTH THE OWNER AND APPLICABLE GOVERNMENTAL AUTHORITIES. ALL THE REQUIRED PERMITS AND EXPLOSIVE CONTROL MEASURES THAT ARE REQUIRED BY THE FEDERAL, STATE, AND LOCAL GOVERNMENTS SHALL BE IN PLACE PRIOR TO STARTING AN EXPLOSIVE PROGRAM. THE CONTRACTOR IS ALSO RESPONSIBLE FOR ALL INSPECTION AND SEISMIC VIBRATION TESTING THAT IS REQUIRED TO MONITOR THE EFFECTS ON ALL LOCAL STRUCTURES.
7. CONTRACTOR SHALL PROVIDE TRAFFIC CONTROL AND GENERALLY ACCEPTED SAFE PRACTICES IN CONFORMANCE WITH: THE "MANUAL ON UNIFORM TRAFFIC CONTROL," AS WELL AS FEDERAL, STATE, AND LOCAL REGULATIONS WHEN DEMOLITION RELATED ACTIVITIES IMPACT ROADWAYS OR ROADWAY RIGHT-OF-WAYS.
8. CONDUCT DEMOLITION ACTIVITIES IN SUCH A MANNER TO ENSURE MINIMUM INTERFERENCE WITH ROADS, STREETS, SIDEWALKS, WALKWAYS, AND OTHER ADJACENT FACILITIES. STREET CLOSURE PERMITS MUST BE RECEIVED FROM THE APPROPRIATE GOVERNMENTAL AUTHORITY.
9. DEMOLITION ACTIVITIES AND EQUIPMENT SHALL NOT USE AREAS OUTSIDE THE DEFINED PROPERTY LINES, WITHOUT WRITTEN PERMISSION OF THE OWNER, AND/OR APPROPRIATE GOVERNMENT AGENCY.
10. USE DUST CONTROL MEASURES TO LIMIT THE AMOUNT OF AIRBORNE DUST AND DIRT RISING AND SCATTERING IN THE AIR TO WITHIN FEDERAL, STATE, AND/OR LOCAL STANDARDS. AFTER THE DEMOLITION IS COMPLETE, ADJACENT STRUCTURES AND IMPROVEMENTS SHALL BE CLEANED OF ALL DUST AND DEBRIS CAUSED BY THE DEMOLITION OPERATIONS. THE CONTRACTOR IS RESPONSIBLE FOR RETURNING ALL ADJACENT AREAS TO THEIR "PRE-DEMOLITION" CONDITION.
11. CONTRACTOR IS RESPONSIBLE TO SAFEGUARD SITE AS NECESSARY TO PERFORM THE DEMOLITION IN SUCH A MANNER AS TO PREVENT THE UNAUTHORIZED ENTRY OF PERSONS AT ANY TIME.
12. THIS DEMOLITION PLAN IS INTENDED TO IDENTIFY THOSE EXISTING ITEMS/CONDITIONS WHICH ARE TO BE REMOVED. IT IS NOT INTENDED TO PROVIDE DIRECTION OTHER THAN THAT ALL METHODS AND MEANS ARE TO BE IN ACCORDANCE WITH STATE, FEDERAL, LOCAL, AND JURISDICTIONAL REQUIREMENTS. THE CONTRACTOR SHALL BE RESPONSIBLE FOR ALL OSHA AND OTHER SAFETY PRECAUTIONS NECESSARY TO PROVIDE A SAFE WORK SITE.
13. THE DEMOLITION CONTRACTOR IS RESPONSIBLE FOR ALL REPAIRS OF DAMAGE TO ALL ITEMS THAT ARE TO REMAIN AS A RESULT OF HIS ACTIVITIES. ALL REPAIRS SHALL USE NEW MATERIAL. THE REPAIRS SHALL RESTORE THE ITEM TO THE PRE-DEMOLITION CONDITION.
14. DEBRIS SHALL NOT BE BURIED ON THE SUBJECT SITE. ALL EXCAVATED MATERIAL AND DEBRIS (SOLID WASTE) SHALL BE DISPOSED OF IN ACCORDANCE WITH ALL MUNICIPAL, COUNTY, STATE, AND FEDERAL LAWS AND APPLICABLE CODES. CONTRACTOR SHALL PROPERLY REMOVE AND DISPOSE OF HAZARDOUS/UNSUITABLE MATERIAL OFFSITE IN ACCORDANCE WITH ALL APPLICABLE CODES, ORDINANCES, AND LAWS.
15. THE CONTRACTOR SHALL COORDINATE SERVICE SHUTOFF AND DISCONNECT/REMOVAL PROCEDURES WITH EACH RESPECTIVE UTILITY COMPANY FOR THE EXISTING UTILITIES SHOWN TO BE REMOVED.
16. THE DEMOLITION PLAN IS NOT INTENDED TO SHOW EROSION CONTROL MEASURES. FOR SUCH GUIDELINES AND DETAILS, SEE THE EROSION AND SEDIMENT CONTROL PLAN AND DETAILS.

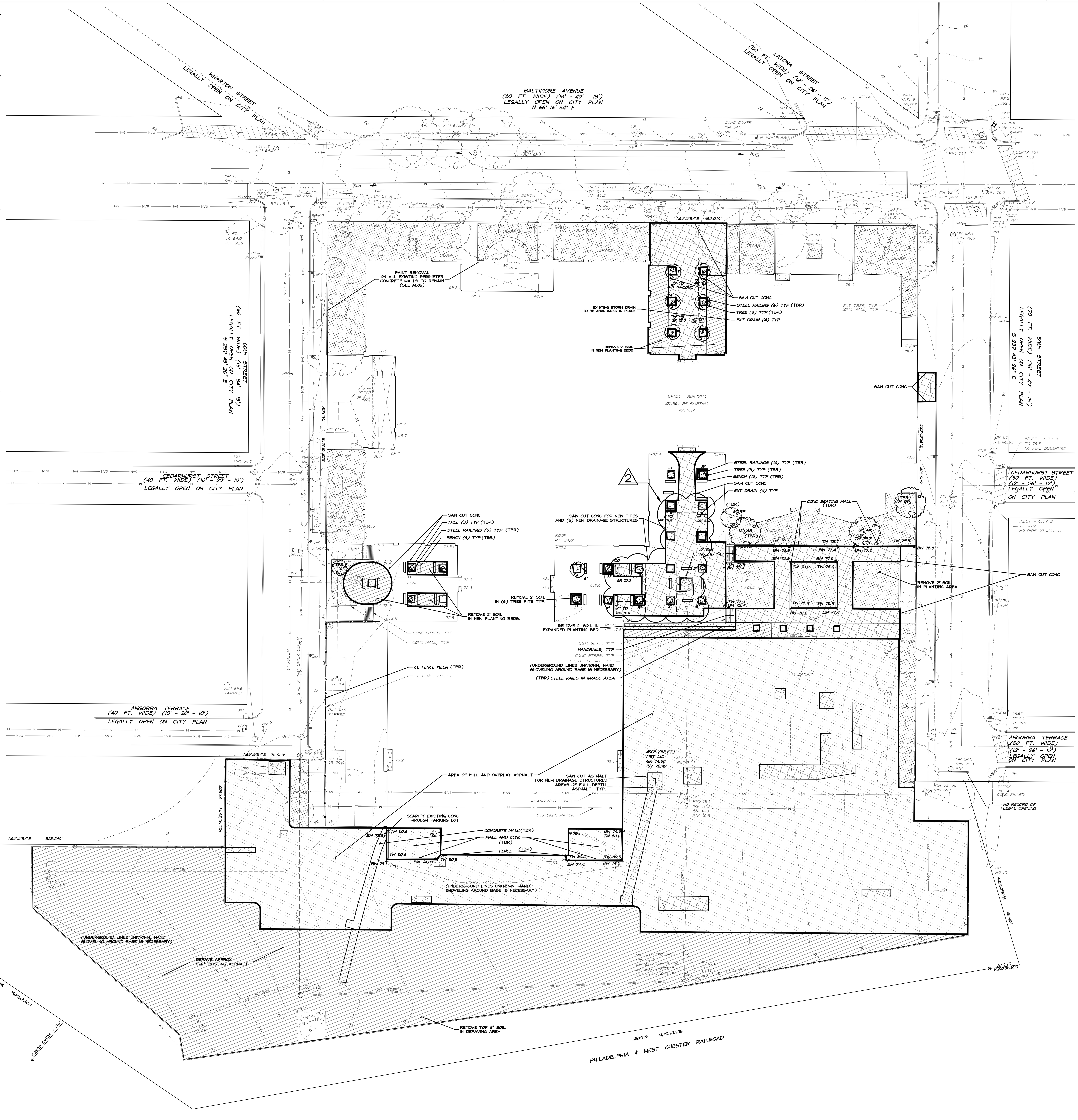

DEMOLITION LEGEND

DESCRIPTION	PROPOSED SYMBOL
FEATURE TO BE REMOVED	—— TEXT
DEMO NOTE	TEXT
IMPERVIOUS TO BE REMOVED	[hatched]
IMPERVIOUS TO BE MILLED	[stippled]
IMPERVIOUS FULL DEPTH	[cross-hatched]
EXISTING PERVIOUS	[dotted]

30 0 30 60
GRAPHIC SCALE IN FEET

THE SCHOOL DISTRICT OF PHILADELPHIA

OFFICE OF CAPITAL PROGRAMS

440 NORTH BROAD STREET
PHILADELPHIA, PA 19130 - 4015
(215) 400 - 4730 | (215) 400 - 4731 (fax)
www.philasd.org

SEAL:

PENNSYLVANIA REGISTERED LANDSCAPE ARCHITECT G. GLENN HARRIS REGISTRATION NUMBER 756-R

NAME: G.GLENN HARRIS DATE
STATE AND LICENSE NO: PA-756-R 02/20/2018

Architectural:

SCHRADERGROUP Architecture, LLC
Address: 161 Leverington Ave, Suite 105, Philadelphia, PA 19127
Phone: 215.482.7440
Fax: 215.482.7441
Email: Canspach@sgarc.com
Attn: Courtney Anspach

Structural:

SCHRADERGROUP Architecture, LLC
Address: 153 East King Street, Suite 211-212, Lancaster, PA 17602
Phone: 717.299.8965
Fax:
Email: tforsberg@sgarc.com
Attn: Tom Forsberg

Civil:

Renew Design Group
Address: 117 East Broad Street, Suite 4, Souderton, PA 18964
Phone: 484.443.4433
Fax: 484.443.4430
Email: kenbissinger@renewdesigngroup.com
Attn: Ken Bissinger

MEP:

Global Engineering Solutions
Address: 6700 Rockledge Drive, #301, Bethesda, MD 20817
Phone: 301.216.2871
Fax: 301.216.9671
Email: vassilis@theges.com
Attn: Vassilis Skardis

Security/IT:

Educational Systems Planning
Address: 49 Old Solomons Island Road, Annapolis, MD 21401
Phone: 410.573.9148
Fax:
Email: bjones@educationalsystemsplanning.com
Attn: Bryan Jones

BID DOCUMENTS
FEBRUARY 16, 2018

Revision Schedule		
NO.	DESCRIPTION	DATE
2	Addendum #2	03-22-2018

SCHOOL & LOCATION

Motivation High School

5900 Baltimore Avenue Philadelphia, PA 19143

PROJECT TITLE

Renovations to Motivation High School

DRAWING TITLE

DEMOLITION PLAN

1" = 30'-0"

LOCATION NO.	FILE NO.
17-015	
DRAWN BY	CHECKED BY
RDG	*RDG*

B-014C OF *2017/18*
B-017C OF *2017/18*
B-015C OF *2017/18*
B-016C OF *2017/18*

DRAWING NO.
C2.0

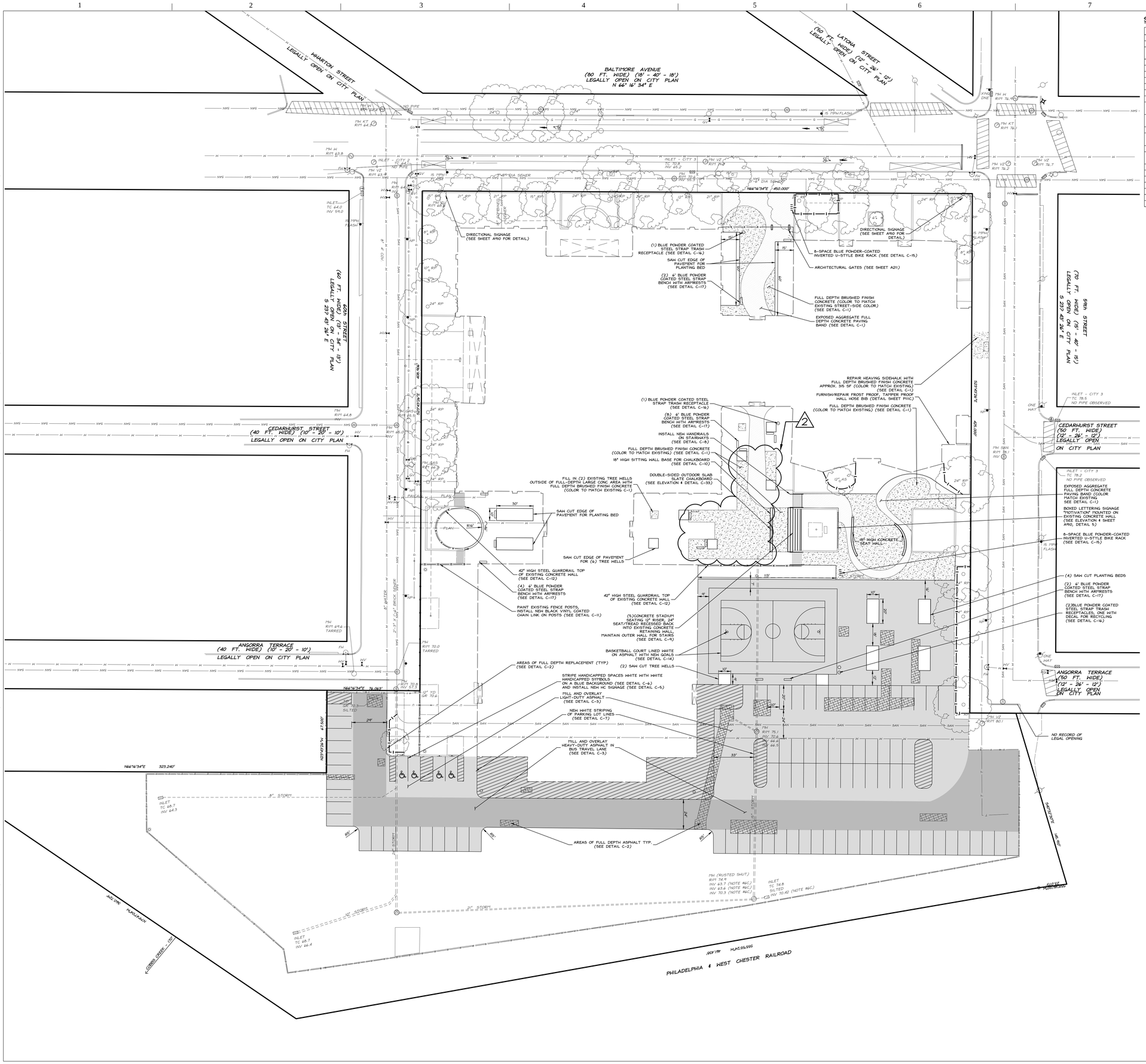

SITE LEGEND

EXISTING SYMBOL	DESCRIPTION	PROPOSED SYMBOL
	PROPERTY LINE	
	IRON PIN, MONUMENT, NAIL	
	BUILDING	
	DRIVEWAY	
	CURB	
	DEPRESSED CURB	
	CARTWAY/EDGE OF PAVEMENT	
	CONCRETE	
	AGGREGATE CONCRETE	
	FULL DEPTH ASPHALT AREAS	
	MILL & OVERLAY ASPHALT (LIGHT DUTY)	
	MILL & OVERLAY ASPHALT (HEAVY DUTY)	
	STRIPING	
	ACCESSIBLE PARKING	
	SIGN	
	STREET NAME SIGN	
	ACCESSIBLE CURB RAMP	
	FENCE	
	MAILBOX	
	PILLAR	
	WALL	
	UTILITY POLE	
	GUY WIRE	

THE SCHOOL DISTRICT OF PHILADELPHIA

OFFICE OF CAPITAL PROGRAMS

440 NORTH BROAD STREET
PHILADELPHIA, PA 19130 - 4015

(215) 400 - 4730 | (215) 400 - 4731 (fax)
www.philasd.org

SEAL:

NAME: G.GLENN HARRIS DATE
STATE AND LICENSE NO: PA-756-R 02/20/2018

Architectural:

SCHRADERGROUP Architecture, LLC
Address: 161 Leverington Ave, Suite 105, Philadelphia, PA 19127
Phone: 215.482.7440
Fax: 215.482.7441
Email: Canspach@sgarc.com
Attn: Courtney Anspach

Structural:

SCHRADERGROUP Architecture, LLC
Address: 153 East King Street, Suite 211-212, Lancaster, PA 17602
Phone: 717.299.8965
Fax:
Email: tforsberg@sgarc.com
Attn: Tom Forsberg

Civil:

Renew Design Group
Address: 117 East Broad Street, Suite 4, Souderton, PA 18964
Phone: 484.443.4433
Fax: 484.443.4430
Email: kenbissinger@renewdesigngroup.com
Attn: Ken Bissinger

MEP:

Global Engineering Solutions
Address: 6700 Rockledge Drive, #301, Bethesda, MD 20817
Phone: 301.216.2871
Fax: 301.216.9671
Email: vassilis@theges.com
Attn: Vassilis Skardis

Security/IT:

Educational Systems Planning
Address: 49 Old Solomons Island Road, Annapolis, MD 21401
Phone: 410.573.9148
Fax:
Email: bjones@educationalsystemsplanning.com
Attn: Bryan Jones

BID DOCUMENTS
FEBRUARY 16, 2018

Revision Schedule

NO.	DESCRIPTION	DATE
2	Addendum #2	03-22-2018

SCHOOL & LOCATION

Motivation High School

5900 Baltimore Avenue Philadelphia, PA 19143

PROJECT TITLE

Renovations to Motivation High School

DRAWING TITLE

SITE PLAN

1" = 30'-0"

LOCATION NO. *17-015*	FILE NO.
DRAWN BY *RDG*	CHECKED BY *RDG*

B-014C OF 2017/18
B-017C OF 2017/18
B-015C OF 2017/18
B-016C OF 2017/18

DRAWING NO.
C3.0

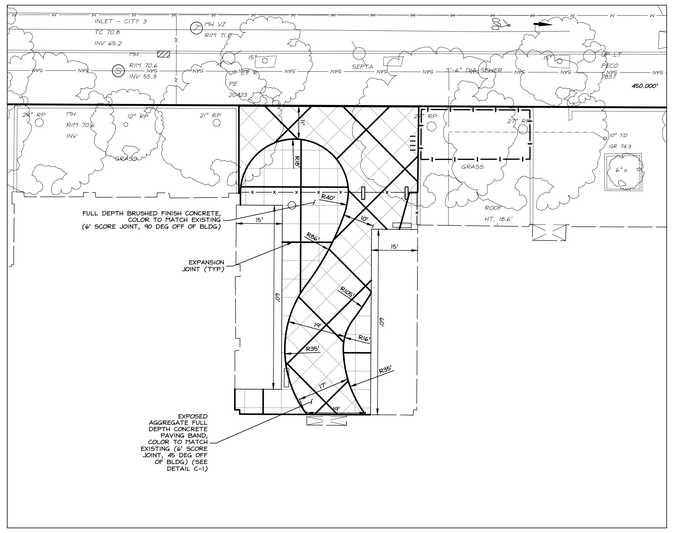

SITE - HIGH SCHOOL ENTRY DETAIL PLAN
1" = 20'0"

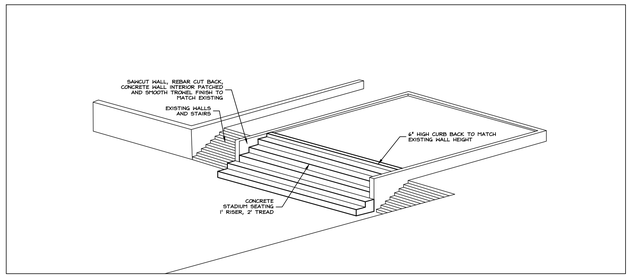

STADIUM SEATING PERSPECTIVE DETAIL
NOT TO SCALE

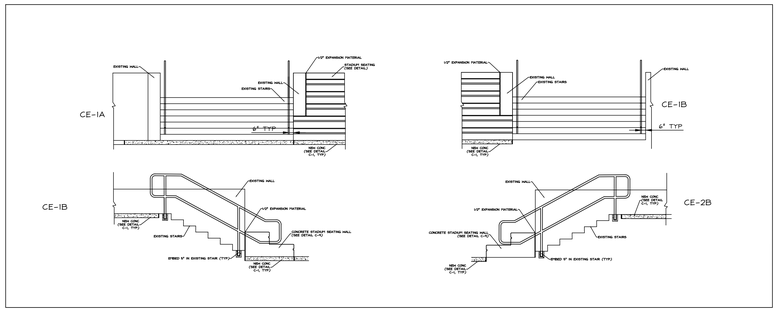

STADIUM SEATING SECTION ELEVATIONS
1" - 5'0"

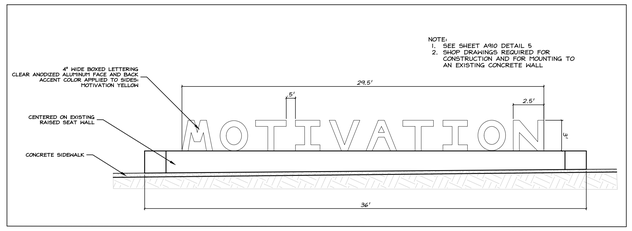

STAINLESS STEEL DECORATIVE LETTERING ELEVATION
1" = 5'0"

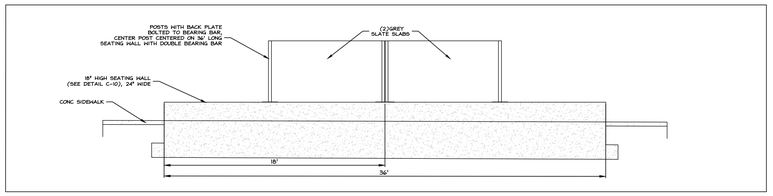

OUTDOOR CHALKBOARD AND SEAT WALL ELEVATION
1" = 5'0"

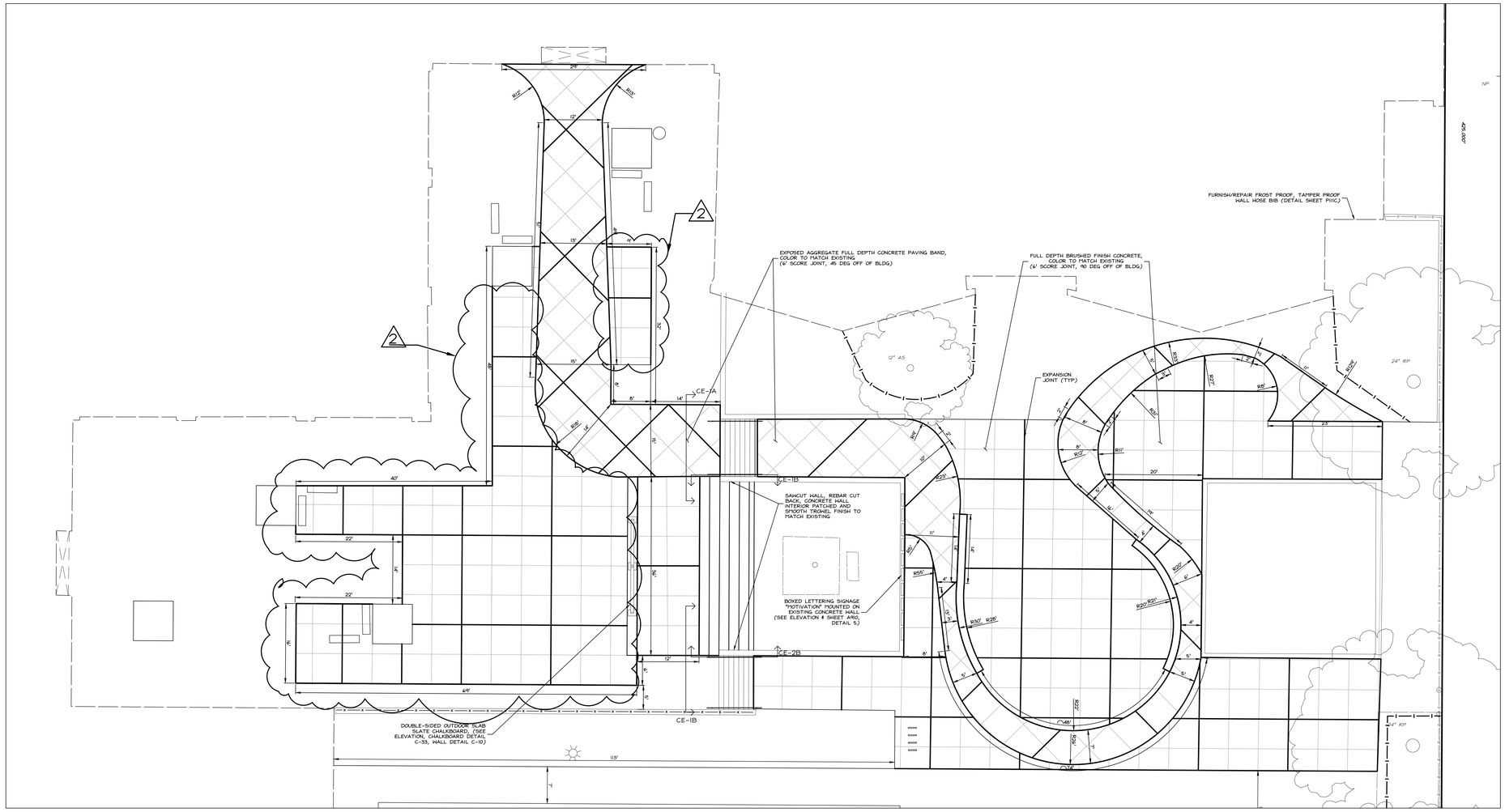

SITE - COURTYARD HIGH SCHOOL ENTRY DETAIL PLAN
1" = 10'0"

SITE LEGEND

EXISTING SYMBOL	DESCRIPTION	PROPOSED SYMBOL
	PROPERTY LINE	
	IRON PIN, MONUMENT, NAIL	
	BUILDING	
	DRIVEWAY	
	CURB	
	DEPRESSED CURB	
	CARTWAY/EDGE OF PAVEMENT	
	CONCRETE	
	AGGREGATE CONCRETE	
	FULL DEPTH ASPHALT AREAS	
	MILL & OVERLAY ASPHALT (LIGHT DUTY)	
	MILL & OVERLAY ASPHALT (HEAVY DUTY)	
	STRIPING	
	ACCESSIBLE PARKING	
	SIGN	
	STREET NAME SIGN	
	ACCESSIBLE CURB RAMP	
	FENCE	
	MAILBOX	
	PILLAR	
	WALL	
	UTILITY POLE	
	GUY WIRE	

GRAPHIC SCALE IN FEET

THE SCHOOL DISTRICT OF PHILADELPHIA

OFFICE OF CAPITAL PROGRAMS

440 NORTH BROAD STREET
PHILADELPHIA, PA 19130 - 4015
(215) 400 - 4730 | (215) 400 - 4731 (fax)
www.philasd.org

SEAL:

NAME: STATE AND LICENSE NO:
DATE 02/20/2018

Architectural:

SCHRADERGROUP Architecture, LLC
Address: 161 Leverington Ave, Suite 105, Philadelphia, PA 19127
Phone: 215.482.7440
Fax: 215.482.7441
Email: Canspach@sgarc.com
Attn: Courtney Anspach

Structural:

SCHRADERGROUP Architecture, LLC
Address: 153 East King Street, Suite 211-212, Lancaster, PA 17602
Phone: 717.299.8965
Fax:
Email: tforsberg@sgarc.com
Attn: Tom Forsberg

Civil:

Renew Design Group
Address: 117 East Broad Street, Suite 4, Souderton, PA 18964
Phone: 484.443.4433
Fax: 484.443.4430
Email: kenbissinger@renewdesigngroup.com
Attn: Ken Bissinger

MEP:

Global Engineering Solutions
Address: 6700 Rockledge Drive, #301, Bethesda, MD 20817
Phone: 301.216.2871
Fax: 301.216.9671
Email: vassilis@theges.com
Attn: Vassilis Skardis

Security/IT:

Educational Systems Planning
Address: 49 Old Solomons Island Road, Annapolis, MD 21401
Phone: 410.573.9148
Fax:
Email: bjones@educationalsystemsplanning.com
Attn: Bryan Jones

BID DOCUMENTS
FEBRUARY 16, 2018

Revision Schedule

NO.	DESCRIPTION	DATE
2	Addendum #2	03-22-2018

SCHOOL & LOCATION

Motivation High School

5900 Baltimore Avenue Philadelphia, PA 19143

PROJECT TITLE

Renovations to Motivation High School

DRAWING TITLE

SITE DETAILS

AS NOTED

LOCATION NO.	FILE NO.
17-015	
DRAWN BY *RDG*	CHECKED BY *RDG*

B-014C OF *2017/18*
B-017C OF *2017/18*
B-015C OF *2017/18*
B-016C OF *2017/18*

DRAWING NO.
C3.1

EXISTING DATA SOURCES

1. SURVEY DATA:

   BOUNDARY INFORMATION SHOWN HEREON IS TAKEN FROM A PLAN PREPARED BY RENEW DESIGN GROUP DATED 08/28/17, AND IS BASED UPON A FIELD SURVEY PERFORMED IN AUGUST 2017. BOUNDARY DELINEATION WAS BASED ON DEEDS, PLANS OF RECORD, & PHYSICAL EVIDENCE LOCATED AT THE TIME OF THE SURVEY AND WITHOUT THE BENEFIT OF A TITLE REPORT. THE PROPERTY IS SUBJECT TO ANY EASEMENT, RIGHT-OF-WAY, OR OTHER RESTRICTIONS AND AGREEMENTS WHICH AN ACCURATE TITLE SEARCH MAY DISCLOSE. LOCATIONS OF EXISTING STRUCTURES AND FACILITIES SHOWN HEREON HAVE BEEN FIELD LOCATED. UNDERGROUND UTILITIES ARE SHOWN ONLY TO THE EXTENT OF VISIBLE SURFACE STRUCTURES THAT WERE EVIDENT AT THE TIME OF THE SURVEY.

2. BOUNDARY INFORMATION SHOWN TAKEN FROM DEEDS OF RECORD, PLANS AND FIELD SURVEYS PERFORMED BY McNEILL LAND SURVEYING LLC DURING AUGUST 2017. OUT BOUNDS SHOWN FROM REFERENCE PLAN LISTED IN NOTE 6. A.

3. IMPROVEMENTS SHOWN DERIVED FROM FIELD SURVEYS PERFORMED BY McNEILL LAND SURVEYING LLC DURING AUGUST 2017.

4. BEARING BASIS FOR THE SURVEY AS SHOWN ARE PER DEED.

5. ALL BOUNDARY DISTANCES SHOWN IN PHILADELPHIA DISTRICT STANDARD (PDS).

6. VERTICAL DATUM BASED ON NAVD-88, PER GPS SATELLITE OBSERVATION THEN CONVERTED TO PHILADELPHIA DATUM BY LOWERING ELEVATIONS 4.63 FEET. DATUM SHOWN IS PER THE CITY OF PHILADELPHIA.

7. REFERENCE PLANS:

   a. SURVEY & PLAN OF PROPERTY MADE FOR SCHOOL DISTRICT OF PHILADELPHIA BY JOHN REILLY, SURVEYOR AND REGULATOR OF THE SEVENTH SURVEY DISTRICT, DATED SEPTEMBER 7, 1967. USED FOR OUTER BOUNDARY OF PROPERTY.

   b. CITY STREET PLAN - CP 184

   c. JOHN P. TURNER MIDDLE SCHOOL PLAN REFERENCED BY BELLANTE, CLAUSS, MILLER & NOLAN FOR THE SCHOOL DISTRICT OF PHILADELPHIA BOARD OF EDUCATION DATED FEBRUARY 21, 1969 AND LAST REVISED WITH AN ASBUILT DATE OF NOVEMBER 3, 1972. SHEETS A-1, ME-1, ME-2

   ASBUILT UTILITIES PLOTTED IF GROUND EVIDENCE SUPPORTED.

8. EXISTING UNDERGROUND UTILITY LOCATIONS WERE PLOTTED FROM UTILITY COMPANY PLANS SUPPLIED TO US IN ACCORDANCE WITH PA ACT 199 (2004) OR BY PHYSICAL SURVEY LOCATIONS. ALL UNDERGROUND UTILITY LOCATIONS ARE APPROXIMATE ONLY. CONTRACTORS ARE REQUIRED BY PA ACT 199 TO VERIFY THE EXACT LOCATIONS OF ALL UNDERGROUND UTILITIES PRIOR TO COMMENCING EXCAVATION ACTIVITIES. PENNSYLVANIA ONE CALL SYSTEMS, INC., PHONE NO. 1-800-242-1776 SERIAL NO. 20172161310 LAST UPDATED 08/22/2017 ~MLS

   UTILITY LIST:
   CROWN CASTLE
   AT&T ATLANTA
   COMCAST CABLE
   PECO ENERGY
   LEVEL 3 COMMUNICATIONS LLC
   PHILADELPHIA CITY WATER DEPARTMENT
   PHILADELPHIA CITY DEPARTMENT OF STREETS
   PHILADELPHIA GAS WORKS
   SOUTHEASTERN PA TRANSPORTATION AUTHORITY
   VERIZON PENNSYLVANIA, LLC

9. PORTIONS OF THE SUBJECT PROPERTY, AS SHOWN, FALLS WITHIN ZONE 'X' (UNSHADED) AS DEPICTED ON THE FEDERAL EMERGENCY MANAGEMENT AGENCY FLOOD INSURANCE MAP, FIRM COMMUNITY PANEL NO. 42045C0128F, EFFECTIVE DATE 11/18/2009.

10. THE OFFICE OF PROPERTY ASSESSMENT CITY OF PHILADELPHIA, PENNSYLVANIA IDENTIFIES THE PROPERTY WITH OPA # 783030800; 5900 BALTIMORE AVENUE

11. PLAN WAS PREPARED WITHOUT BENEFIT OF A TITLE REPORT AND PROPERTY IS SUBJECT TO EASEMENTS, CONDITIONS, RESTRICTION, ETC., CONTAINED THEREIN, RECORDED OR UNRECORDED.

12. ATTENTION IS CALLED TO THE ZONING REQUIREMENTS IN THE PHILADELPHIA CODE AS AMENDED.

13. A ZONING PERMIT IS REQUIRED FOR ANY PROPOSED CHANGES TO LOT LINES INCLUDING CONSOLIDATION OF EXISTING PARCELS.

14. GEOLOGIC FORMATIONS:

    AS DERIVED FROM HTTP://SOILMAP.PSU.EDU IN AUGUST 2017, THE SUBJECT TRACT HAS BEEN DETERMINED TO CONTAIN THE FOLLOWING FORMATIONS:

    WISSAHICKON FORMATION

15. SOILS:

    SOILS DATA SHOWN HEREON TAKEN FROM THE SOIL SURVEY GEOGRAPHIC (SSURGO) DATABASE FOR PHILADELPHIA COUNTY, PENNSYLVANIA, AS PREPARED FOR THE U.S. DEPARTMENT OF AGRICULTURE, NATURAL RESOURCES CONSERVATION SERVICE, DATED AUGUST 2, 2017. THE SOILS ON-SITE INCLUDE:

    Ub - URBAN LAND

INLET #	TOTAL		10-YR FLOW
CB1	1,940 SF	0.045 AC±	0.27 CFS
CB2	1,877 SF	0.043 AC±	0.26 CFS
CB3	1,305 SF	0.030 AC±	0.18 CFS
CB4	2,772 SF	0.064 AC±	0.38 CFS
CB5	18,285 SF	0.420 AC±	1.99 CFS
CB6	1,177 SF	0.027 AC±	0.08 CFS
CB7	4,825 SF	0.111 AC±	0.60 CFS
D11	27,943 SF	0.641 AC±	3.68 CFS
OS1	47,518 SF	1.091 AC±	5.07 CFS
IN1	13,422 SF	0.308 AC±	0.88 CFS
IN2	24,506 SF	0.563 AC±	1.77 CFS

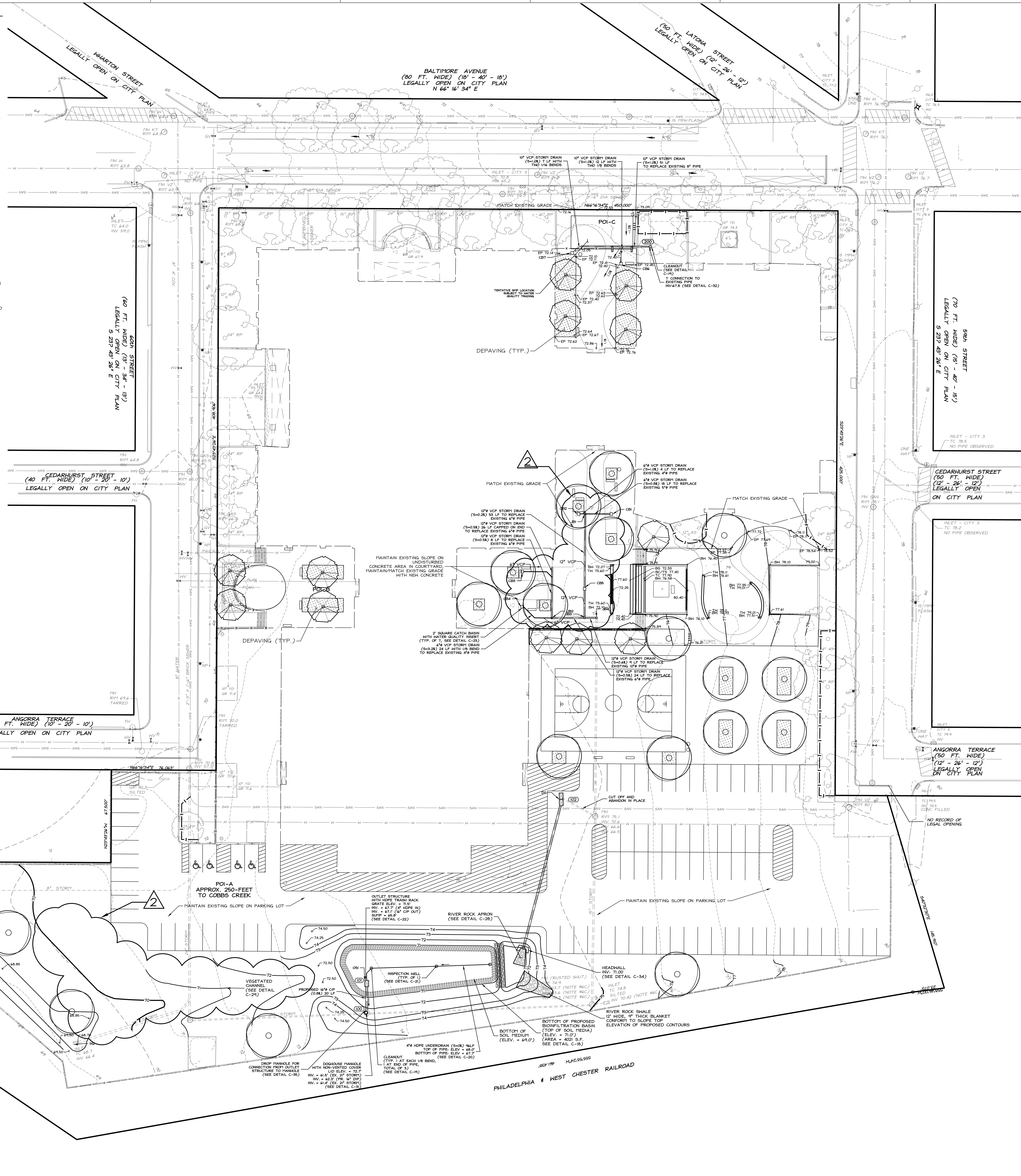

GRADING LEGEND

EXISTING SYMBOL	DESCRIPTION	PROPOSED SYMBOL
	STORM SEWER > 8"	
	STORM SEWER < 8"	
	SLOPE GRADE	1.0%
	STORM INLET	
	STORM MANHOLE	
	ENDWALL	
	RIPRAP	
	CATCH BASIN	CB3
360	MAJOR CONTOUR	365
359	MINOR CONTOUR	366
x 355.69	SPOT ELEVATION	x 355.69
	EDGE OF PAVEMENT	x EP 355.69
	TOP OF CURB	x TC 355.69
	BOTTOM OF CURB	x BC 355.69
	TOP OF WALL	x TW 355.69
	BOTTOM OF WALL	x BW 355.69
	TOP OF STAIRS	x TS 355.69
	BOTTOM OF STAIRS	x BS 355.69

UTILITY LEGEND

EXISTING SYMBOL	DESCRIPTION	PROPOSED SYMBOL
OU — OU	OVERHEAD WIRES	OHU
U — U	UNDERGROUND WIRES	UGU
OE — OE	OVERHEAD ELECTRIC	OHE
E — E	UNDERGROUND ELECTRIC	UGE
OT — OT	OVERHEAD TELEPHONE	OHT
T — T	UNDERGROUND TELEPHONE	UGT
C — C	CABLE TV LINE	CATV
	GUY WIRE	FO — FO
	CABLE BOX	
	LIGHT POST	
G — G	GAS MAIN	G — G
GL — GL	GAS SERVICE	GS — GS
SAN	SANITARY SEWER MAIN	
SL — SL	SANITARY SEWER LATERAL	SL — SL
S	SANITARY SEWER MANHOLE	S
CO	SANITARY SEWER CLEANOUT	
W — W	WATER MAIN	W — W
WL — WL	WATER SERVICE	WS — WS
FS — FS	FIRE SERVICE	FS — FS
WV	WATER VALVE	
WM	WATER METER	
W	WATER MANHOLE	W
	FIRE HYDRANT	
BOV	WATER BLOW-OFF VALVE	

GRADING NOTES

1. SITE GRADING SHALL BE PERFORMED IN ACCORDANCE WITH THESE PLANS, SPECIFICATIONS, REFERENCED DOCUMENTS, AND THE RECOMMENDATIONS SET FORTH IN THE INFILTRATION REPORT REFERENCED IN THIS PLAN SET. ALL EXCAVATED OR FILLED AREAS SHALL BE COMPACTED TO 95% OF MODIFIED PROCTOR MAXIMUM DENSITY PER ASTM TEST D-1557. MOISTURE CONTENT AT THE TIME OF PLACEMENT SHALL BE SUBMITTED IN COMPACTION VERIFY THAT ALL FILLED AREAS AND SUBBASE AREAS TO BE PAVED HAVE BEEN COMPACTED IN ACCORDANCE WITH THESE PLANS AND SPECIFICATIONS. SUBBASE MATERIAL FOR SIDEWALKS, CURB, OR ASPHALT SHALL BE FREE OF ORGANIC AND OTHER UNSUITABLE MATERIALS. SHOULD SUBBASE BE DEEMED UNSUITABLE BY OWNER OR OWNER'S REPRESENTATIVE, SUBBASE IS TO BE REMOVED AND FILLED WITH APPROVED FILL MATERIAL COMPACTED TO 95% OPTIMUM DENSITY (AS DETERMINED BY MODIFIED PROCTOR METHOD).
2. PAVEMENT SHALL BE SAW CUT IN STRAIGHT LINES TO THE FULL DEPTH OF THE EXISTING PAVEMENT. ALL DEBRIS FROM REMOVAL OPERATIONS SHALL BE REMOVED FROM THE SITE AT THE TIME OF EXCAVATION. STOCKPILING OF DEBRIS WILL NOT BE PERMITTED.
3. THE CONTRACTOR IS RESPONSIBLE FOR VERIFICATION OF EXISTING TOPOGRAPHIC INFORMATION AND UTILITY INVERT ELEVATIONS PRIOR TO COMMENCEMENT OF ANY CONSTRUCTION. CONTRACTOR TO ENSURE 0.75% MINIMUM SLOPE AGAINST ALL ISLANDS, GUTTERS, AND CURBS; 1.0% ON ALL CONCRETE SURFACES; AND 1.5% MINIMUM ON ASPHALT, AND 2.0% MINIMUM IN LANDSCAPED AREAS TO PREVENT PONDING. ANY DISCREPANCIES THAT MAY AFFECT THE PUBLIC SAFETY OR PROJECT COST MUST BE IDENTIFIED TO THE ENGINEER IN WRITING IMMEDIATELY. PROCEEDING WITH CONSTRUCTION WITHOUT NOTIFICATION IS DONE SO AT THE CONTRACTOR'S OWN RISK.
4. THE GROUND IMMEDIATELY ADJACENT TO THE FOUNDATION SHALL BE SLOPED AWAY FROM THE BUILDING AT A SLOPE OF NOT LESS THAN 1:20 (5%) FOR A MINIMUM DISTANCE OF 10 FEET MEASURED PERPENDICULAR TO THE FACE OF THE WALL. IF PHYSICAL OBSTRUCTIONS OR LOT LINES PROHIBIT 10 FEET OF HORIZONTAL DISTANCE, A 5% SLOPE SHALL BE PROVIDED TO AN APPROVED ALTERNATIVE METHOD OF DIVERTING WATER FROM THE FOUNDATION. SWALES USED FOR THIS PURPOSE SHALL BE SLOPED A MINIMUM OF 2% WHERE LOCATED WITHIN 10 FEET OF THE BUILDING FOUNDATION. IMPERVIOUS SURFACES WITHIN 10 FEET OF THE BUILDING FOUNDATION SHALL BE SLOPED A MINIMUM OF 2% AWAY FROM THE BUILDING.
5. IN CASE OF DISCREPANCIES BETWEEN PLANS, THE SITE / RECORD PLAN WILL SUPERSEDE IN ALL CASES. THE ENGINEER OF RECORD MUST BE IMMEDIATELY NOTIFIED IN WRITING OF ANY CONFLICTS.
6. THE CONTRACTOR SHALL BE REQUIRED TO SECURE ALL NECESSARY PERMITS (INCLUDING DEP, ETC.) FOR ALL OFF-SITE HAUL AND/OR BORROW SITES. CONTRACTOR SHALL SUPPLY A COPY OF APPROVALS TO ENGINEER AND OWNER PRIOR TO INITIATING WORK.
7. BOTTOM OF WALL ELEVATIONS (BW) REPRESENT THE PROPOSED FINISHED GRADE AT THE FACE OF WALL AND DO NOT REPRESENT THE ACTUAL FOUNDATION GRADE OF THE PROPOSED WALL.

GENERAL UTILITIES NOTES

1. ALL NEW UTILITIES/SERVICES, INCLUDING ELECTRIC, TELEPHONE, CABLE TV, ETC. ARE TO BE INSTALLED UNDERGROUND. ALL NEW UTILITIES/SERVICES SHALL BE INSTALLED IN ACCORDANCE WITH THE UTILITY/SERVICE PROVIDER INSTALLATION SPECIFICATIONS AND STANDARDS.
2. THE LOCATION OF ALL EXISTING AND PROPOSED SERVICES ARE APPROXIMATE AND MUST BE CONFIRMED INDEPENDENTLY WITH LOCAL UTILITY COMPANIES PRIOR TO COMMENCEMENT OF ANY CONSTRUCTION, REMOVAL OR EXCAVATION. SANITARY SEWER AND ALL OTHER UTILITY SERVICE CONNECTION POINT CONFLICTS SHALL BE REPORTED IMMEDIATELY IN WRITING TO THE ENGINEER.
3. ALL UTILITY EXTENSIONS FROM THE BUILDING BY OTHER TRADES SHALL BE CONNECTED TO THE CONTINUATION UTILITY LINES ON THE SITE. THE GENERAL CONTRACTOR SHALL MAKE THE CONNECTIONS AT A POINT 5' FROM THE BUILDING WALL WHERE OTHER TRADES HAVE ENDED THEIR WORK. THE GC SHALL COORDINATE SCHEDULING OF THESE CONNECTIONS WITH OTHER TRADES TO ASSURE THE SYSTEM IS COMPLETE WHEN FLOW WILL BEGIN IN THE LINES.
4. CONSTRUCTION SHALL COMMENCE BEGINNING AT THE LOWEST INVERT (POINT OF CONNECTION) AND PROGRESS UP GRADIENT. PROPOSED INTERFACE POINTS (CROSSINGS) WITH EXISTING UNDERGROUND UTILITIES SHALL BE FIELD VERIFIED BY TEST PIT PRIOR TO COMMENCEMENT OF CONSTRUCTION.
5. DEFINE AND LOCATE VERTICALLY AND HORIZONTALLY ALL ACTIVE UTILITY AND/OR SERVICE SYSTEMS THAT ARE NOT TO REMAIN. THE CONTRACTOR IS RESPONSIBLE TO PROTECT AND MAINTAIN ALL ACTIVE SYSTEMS THAT ARE NOT BEING REMOVED/RELOCATED DURING SITE ACTIVITY.
6. THE CONTRACTOR SHALL FAMILIARIZE THEMSELVES WITH THE APPLICABLE UTILITY SERVICE PROVIDER REQUIREMENTS AND IS RESPONSIBLE FOR ALL COORDINATION REGARDING UTILITY WORK AS IDENTIFIED OR REQUIRED FOR PROJECT. THE CONTRACTOR SHALL PROVIDE THE OWNER WRITTEN NOTIFICATIONS THAT THE EXISTING UTILITIES AND SERVICES HAVE BEEN TERMINATED AND ABANDONED IN ACCORDANCE WITH JURISDICTION AND UTILITY COMPANY REQUIREMENTS.
7. THE CONTRACTOR IS RESPONSIBLE FOR COORDINATION OF SITE PLAN DOCUMENTS AND ARCHITECTURAL DESIGN FOR EXACT BUILDING UTILITY CONNECTION LOCATIONS, GREASE TRAP REQUIREMENTS/DETAILS, DOOR ACCESS, AND EXTERIOR GRADING. (THE UTILITY SERVICE SIZES ARE TO BE DETERMINED BY ARCHITECT.) THE CONTRACTOR SHALL COORDINATE INSTALLATION OF UTILITIES/SERVICES WITH THE INDIVIDUAL COMPANIES TO AVOID CONFLICTS AND ENSURE PROPER DEPTHS ARE ACHIEVED. IN ADDITION TO MEETING THE UTILITY OWNER REQUIREMENTS, THE UTILITY TIE-INS/CONNECTIONS SHALL BE COORDINATED. THIS SHALL BE COMPLETED PRIOR TO CONNECTING TO THE EXISTING UTILITY/SERVICE. WHERE CONFLICTS EXIST WITH THESE PLANS, THE ENGINEER OF RECORD SHALL BE NOTIFIED IN WRITING TO RESOLVE SAID CONFLICTS PRIOR TO CONSTRUCTION.
8. THE TOPS OF EXISTING MANHOLES, INLET STRUCTURES, AND SANITARY CLEANOUT TOPS SHALL BE ADJUSTED, IF REQUIRED, TO MATCH THE GRADING AND UTILITY PLAN(S). THE SANITARY CLEANOUT TOPS SHALL BE REINSTALLED IN THE SAME MANNER AS THE ORIGINAL CLEANOUTS.
9. NEW LATERAL CONNECTIONS MUST BE MADE IN ACCORDANCE WITH PWD SPECIFICATIONS. ALL LATERAL MATERIAL AND CONSTRUCTION SHALL BE IN ACCORDANCE WITH PWD SPECIFICATION.
10. RELOCATION OF EXISTING UTILITY POLES SHALL BE COORDINATED WITH THE PUBLIC UTILITY WHICH OWNS THE POLE AND ANY UTILITY UTILIZING THE POLE. RELOCATION SHALL BE PERFORMED BY AN APPROVED CONTRACTOR AND PER THE APPROPRIATE UTILITY COMPANY SPECIFICATIONS.
11. ALL SEWER LATERALS TO BE DUCTILE IRON PIPE (DIP).

STORMWATER NOTES

1. ROOF LEADERS SHALL BE DISCONNECTED FROM THE PROPOSED STORMWATER MANAGEMENT SYSTEM.
2. ANTI-SEEP COLLARS SHALL BE INSTALLED AROUND THE PIPE BARREL WITHIN THE NORMAL SATURATION ZONE OF THE DETENTION BASIN BERMS. THE ANTI-SEEP COLLARS AND THEIR CONNECTIONS TO THE PIPE BARRELS SHALL BE WATERTIGHT. THE ANTI-SEEP COLLARS SHALL EXTEND A MINIMUM OF TWO FEET BEYOND THE OUTSIDE OF THE PRINCIPAL PIPE BARREL. THE MAXIMUM SPACING BETWEEN COLLARS SHALL BE FOURTEEN (14) TIMES THE MINIMUM PROJECTION OF THE COLLAR MEASURED PERPENDICULAR TO THE PIPE. A MINIMUM OF TWO (2) ANTI-SEEP COLLARS SHALL BE INSTALLED ON EACH OUTLET PIPE.
3. IF A CONFLICT ARISES DURING THE INSTALLATION OF ANY PART OF THE STORM SEWER SYSTEM THE ENGINEER IS TO BE NOTIFIED IMMEDIATELY IN WRITING.

30 0 30 60
GRAPHIC SCALE IN FEET

THE SCHOOL DISTRICT OF PHILADELPHIA

OFFICE OF CAPITAL PROGRAMS

440 NORTH BROAD STREET
PHILADELPHIA, PA 19130 - 4015
(215) 400 - 4730 | (215) 400 - 4731 (fax)
www.philasd.org

SEAL:

COMMONWEALTH OF PENNSYLVANIA REGISTERED PROFESSIONAL ENGINEER MARK D. BOWEN PE-057426

NAME: MARK D. BOWEN DATE
STATE AND LICENSE NO: PA PE-057426 02/20/2018

Architectural:
SCHRADERGROUP Architecture, LLC
Address: 161 Leverington Ave, Suite 105, Philadelphia, PA 19127
Phone: 215.482.7440
Fax: 215.482.7441
Email: Canspach@sgarc.com
Attn: Courtney Anspach

Structural:
SCHRADERGROUP Architecture, LLC
Address: 153 East King Street, Suite 211-212, Lancaster, PA 17602
Phone: 717.299.8965
Fax:
Email: tforsberg@sgarc.com
Attn: Tom Forsberg

Civil:
Renew Design Group
Address: 117 East Broad Street, Suite 4, Souderton, PA 18964
Phone: 484.443.4433
Fax: 484.443.4430
Email: kenbissinger@renewdesigngroup.com
Attn: Ken Bissinger

MEP:
Global Engineering Solutions
Address: 6700 Rockledge Drive, #301, Bethesda, MD 20817
Phone: 301.216.2871
Fax: 301.216.9671
Email: vassilis@theges.com
Attn: Vassilis Skardis

Security/IT:
Educational Systems Planning
Address: 49 Old Solomons Island Road, Annapolis, MD 21401
Phone: 410.573.9148
Fax:
Email: bjones@educationalsystemsplanning.com
Attn: Bryan Jones

BID DOCUMENTS
FEBRUARY 16, 2018

Revision Schedule		
NO.	DESCRIPTION	DATE
2	Addendum #2	03-22-2018

SCHOOL & LOCATION
Motivation High School
5900 Baltimore Avenue Philadelphia, PA 19143

PROJECT TITLE
Renovations to Motivation High School

DRAWING TITLE
GRADING & UTILITY PLAN

1" = 30'-0"

LOCATION NO.	FILE NO.
17-015	
DRAWN BY	CHECKED BY
RDG	RDG

B-014C OF 2017/18
B-017C OF 2017/18
B-015C OF 2017/18
B-016C OF 2017/18

DRAWING NO.
C4.0

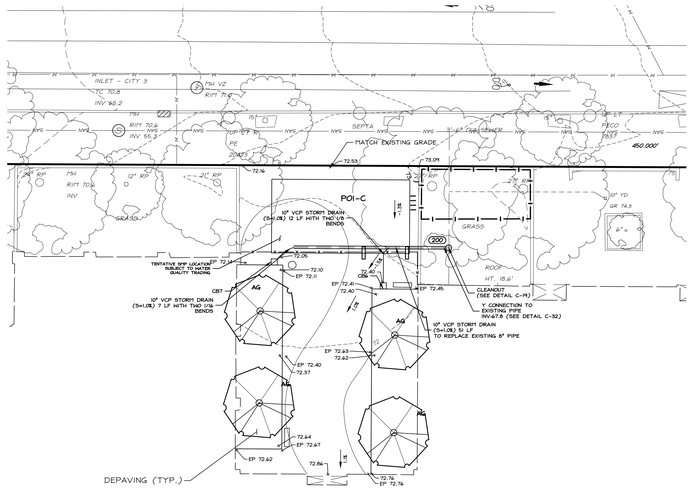

GRADING & UTILITY - HIGH SCHOOL ENTRY DETAIL
1" = 20'0"

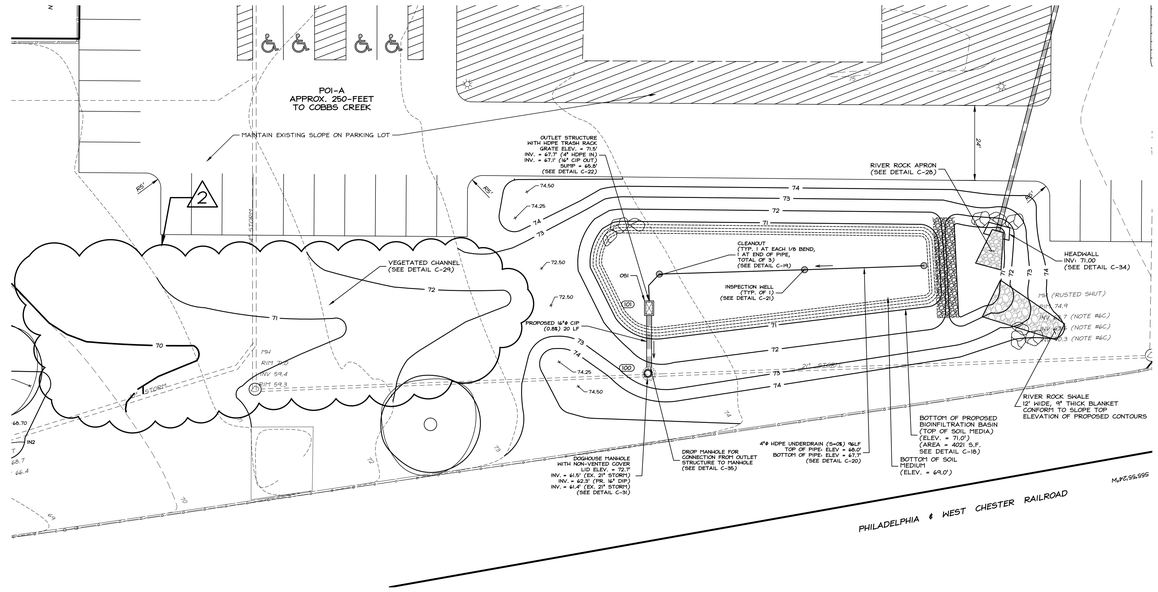

GRADING & UTILITY - BIOINFILTRATION BASIN DETAIL
1" = 20'0"

GRADING LEGEND

EXISTING SYMBOL	DESCRIPTION	PROPOSED SYMBOL
	STORM SEWER > 8"	
	STORM SEWER < 8"	
	SLOPE GRADE	1.0%
	STORM INLET	
	STORM MANHOLE	
	ENDWALL	
	RIPRAP	
	CATCH BASIN	CB5
340	MAJOR CONTOUR	340
339	MINOR CONTOUR	346
x 355.6A	SPOT ELEVATION	x 355.6A
	EDGE OF PAVEMENT	x EP 355.6A
	TOP OF CURB	x TC 355.6A
	BOTTOM OF CURB	x BC 355.6A
	TOP OF WALL	x TW 355.6A
	BOTTOM OF WALL	x BW 355.6A
	TOP OF STAIRS	x TS 355.6A
	BOTTOM OF STAIRS	x BS 355.6A

UTILITY LEGEND

EXISTING SYMBOL	DESCRIPTION	PROPOSED SYMBOL
OU	OVERHEAD WIRES	OHU
U	UNDERGROUND WIRES	UGU
OE	OVERHEAD ELECTRIC	OHE
E	UNDERGROUND ELECTRIC	UGE
OT	OVERHEAD TELEPHONE	OHT
T	UNDERGROUND TELEPHONE	UGT
C	CABLE TV LINE	CATV
	GUY WIRE	FO FO
	CABLE BOX	
	LIGHT POST	
G	GAS MAIN	G G
GL	GAS SERVICE	GS GS
SAN	SANITARY SEWER MAIN	
SL	SANITARY SEWER LATERAL	SL SL
S	SANITARY SEWER MANHOLE	S
PCO	SANITARY SEWER CLEANOUT	
W	WATER MAIN	W W
WL	WATER SERVICE	WS WS
FS	FIRE SERVICE	FS FS
WV	WATER VALVE	W
WM	WATER METER	
W	WATER MANHOLE	W
	FIRE HYDRANT	
BOV	WATER BLOW-OFF VALVE	

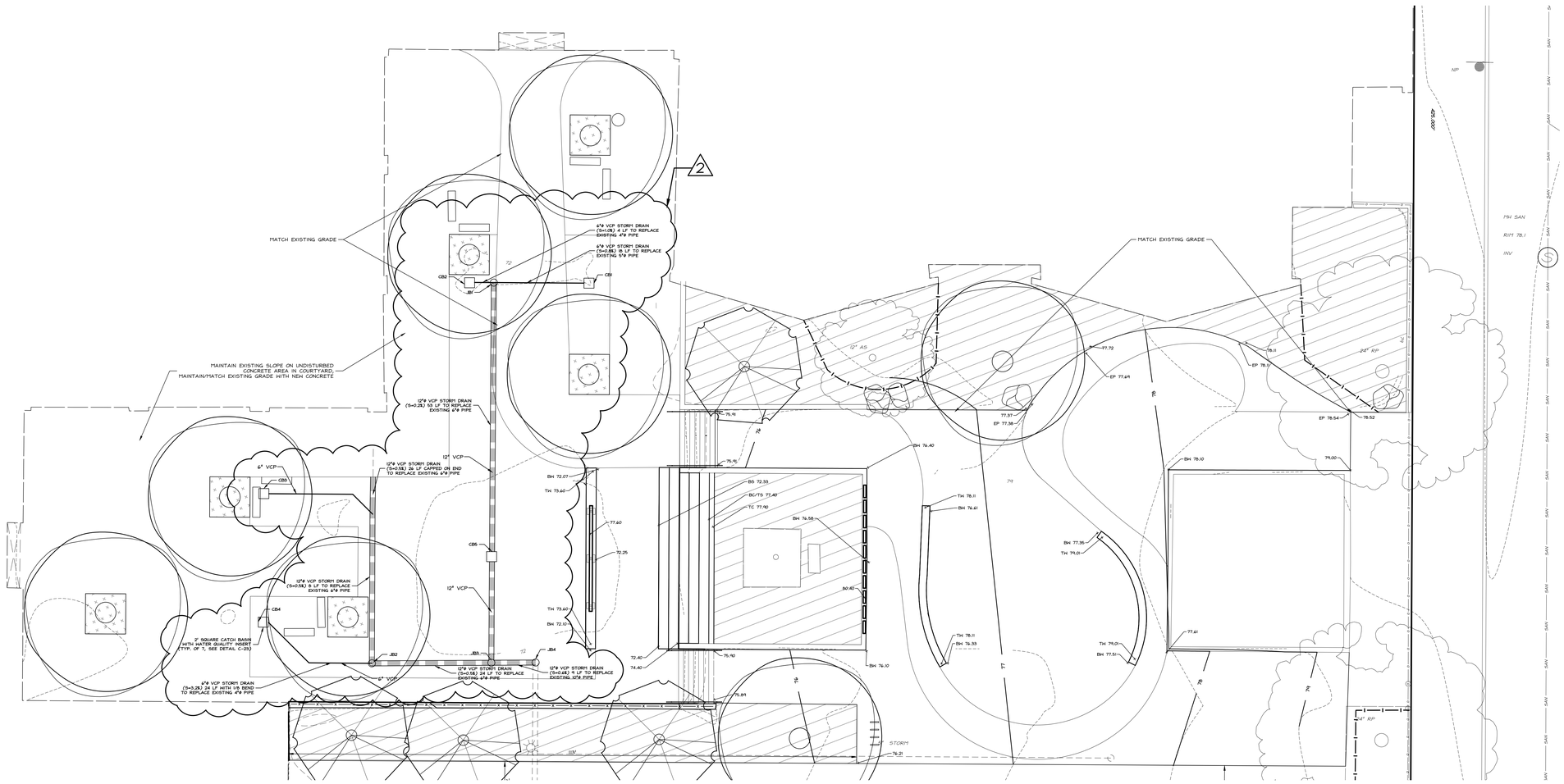

GRADING & UTILITY - COURTYARD HIGH SCHOOL ENTRY DETAIL PLAN
1" = 10'0"

GRAPHIC SCALE IN FEET

THE SCHOOL DISTRICT OF PHILADELPHIA

OFFICE OF CAPITAL PROGRAMS

440 NORTH BROAD STREET
PHILADELPHIA, PA 19130 - 4015

(215) 400 - 4730 | (215) 400 - 4731 (fax)
www.philasd.org

SEAL:

COMMONWEALTH OF PENNSYLVANIA REGISTERED PROFESSIONAL MARK D. BOWEN ENGINEER PE-057426

NAME: MARK D. BOWEN DATE
STATE AND LICENSE NO: **PA PE-057426** 02/20/2018

Architectural:

SCHRADERGROUP Architecture, LLC
Address: 161 Leverington Ave, Suite 105, Philadelphia, PA 19127
Phone: 215.482.7440
Fax: 215.482.7441
Email: Canspach@sgarc.com
Attn: Courtney Anspach

Structural:

SCHRADERGROUP Architecture, LLC
Address: 153 East King Street, Suite 211-212, Lancaster, PA 17602
Phone: 717.299.8965
Fax:
Email: tforsberg@sgarc.com
Attn: Tom Forsberg

Civil:

Renew Design Group
Address: 117 East Broad Street, Suite 4, Souderton, PA 18964
Phone: 484.443.4433
Fax: 484.443.4430
Email: kenbissinger@renewdesigngroup.com
Attn: Ken Bissinger

MEP:

Global Engineering Solutions
Address: 6700 Rockledge Drive, #301, Bethesda, MD 20817
Phone: 301.216.2871
Fax: 301.216.9671
Email: vassilis@theges.com
Attn: Vassilis Skardis

Security/IT:

Educational Systems Planning
Address: 49 Old Solomons Island Road, Annapolis, MD 21401
Phone: 410.573.9148
Fax:
Email: bjones@educationalsystemsplanning.com
Attn: Bryan Jones

BID DOCUMENTS
FEBRUARY 16, 2018

Revision Schedule

NO.	DESCRIPTION	DATE
2	Addendum #2	03-22-2018

SCHOOL & LOCATION

Motivation High School

5900 Baltimore Avenue Philadelphia, PA 19143

PROJECT TITLE

Renovations to Motivation High School

DRAWING TITLE

GRADING & UTILITY DETAIL

SCALE AS NOTED

LOCATION NO. *17-015*	FILE NO.
DRAWN BY *RDG*	CHECKED BY *RDG*

B-014C	OF	*2017/18*
B-017C	OF	*2017/18*
B-015C	OF	*2017/18*
B-016C	OF	*2017/18*

DRAWING NO.

C4.1

1 2 3 4 5 6 7 8

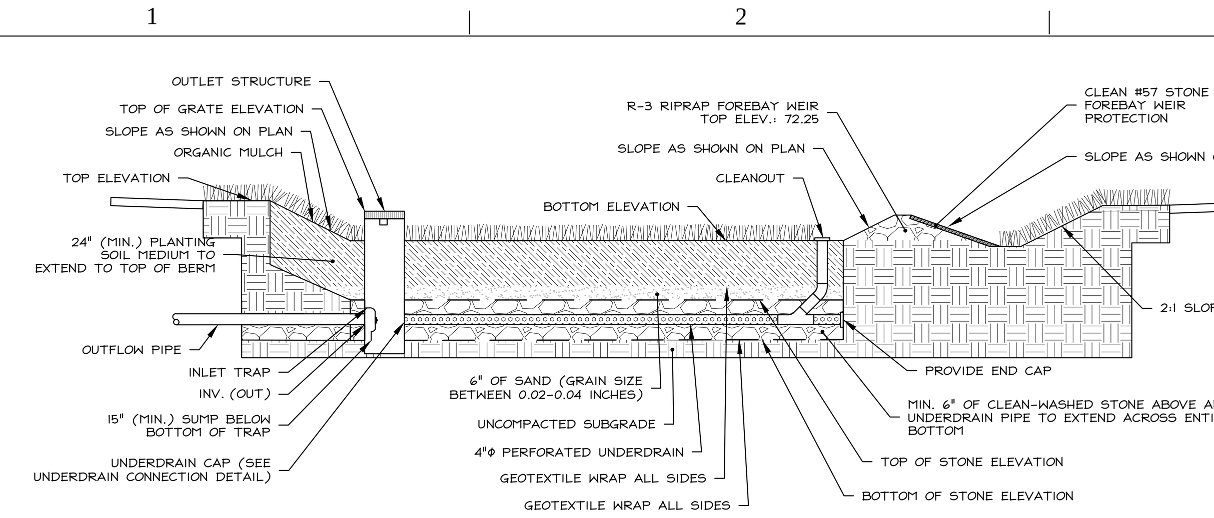

BASIN	OUTLET STRUCTURE	TOP ELEVATION	BOTTOM ELEVATION	TOP OF SAND ELEVATION	TOP OF STONE ELEVATION	BOTTOM OF STONE ELEVATION	TOP OF GRATE ELEVATION	UNDERDRAIN INVERT	INV. (OUT)	OUTFLOW PIPE (DIAM./MATERIAL)
1	INLET BOX	74.5	71.0	69.0	68.5	67.2	71.5	67.7	67.7	16" DIP

NOTES:

1. TEXTURE OF PLANTING SOIL SHOULD CONFORM TO THE CLASSIFICATION WITHIN THE USDA TRIANGLE FOR SANDY LOAM OR LOAMY SAND. PLANTING SOIL SHOULD BE A MIXTURE OF SAND, SILT, AND CLAY PARTICLES AS REQUIRED TO MEET THE CLASSIFICATION. RANGES OF PARTICLE SIZE DISTRIBUTION, AS DETERMINED BY PIPETTE METHOD IN COMPLIANCE WITH ASTM F-1632:

   SAND (0.05-2.0 mm) 50 - 85%
   SILT (0.002 TO 0.05 mm) 40% MAXIMUM
   CLAY (LESS THAN 0.002 mm) 10% MAXIMUM
   GRAVEL (2.0 TO 12.7 mm) 15% MAXIMUM

2. PLANTING SOIL SHOULD BE SCREENED AND FREE OF STONES LARGER THAN A HALF-INCH (1/2"; 12.7 mm) IN ANY DIMENSION. NO MORE THAN TEN PERCENT (10%) OF THE SOIL VOLUME SHOULD BE COMPOSED OF SOIL PEDS GREATER THAN ONE INCH (1").
3. CLODS, OR NATURAL CLUMPS OF SOILS, GREATER THAN THREE INCHES (3") IN ANY DIMENSION SHOULD BE ABSENT FROM THE PLANTING SOIL. SMALL CLODS RANGING FROM ONE TO THREE INCHES (1-3") AND PEDS, NATURAL SOIL CLUMPS UNDER ONE INCH (1") IN ANY DIMENSION, MAY BE PRESENT BUT SHOULD NOT MAKE UP MORE THAN TEN PERCENT (10%) OF THE SOIL BY VOLUME.
4. THE pH OF THE PLANTING SOIL SHOULD HAVE A RANGE OF 5.8-7.1.
5. SOLUBLE SALTS SHOULD BE LESS THAN 2.0 mmhos/cm (dS/m), TYPICALLY AS MEASURED BY 1:2 SOIL-WATER RATIO BASIC SOIL SALINITY TESTING. SODIC SOILS (EXCHANGEABLE SODIUM PERCENTAGE (ESP) GREATER THAN 15 AND/OR SODIUM ADSORPTION RATIO (SAR) GREATER THAN 13) SHALL NOT BE ACCEPTABLE FOR USE REGARDLESS OF AMENDMENT.
6. ORGANIC CONTENT OF PLANTING SOIL SHOULD HAVE A RANGE OF THREE TO FIFTEEN PERCENT (3-15%) BY WEIGHT AS DETERMINED BY LOSS ON IGNITION (ASTM D2974). TO ADJUST ORGANIC CONTENT, PLANTING SOIL MAY BE AMENDED, PRIOR TO PLACING AND FINAL GRADING, WITH THE ADDITION OF ORGANIC COMPOST.
7. ALL AGGREGATE WITHIN THE STONE STORAGE BED SHALL BE CLEAN-WASHED, DEFINED AS HAVING LESS THAN 0.5% WASH LOSS, BY MASS, WHEN TESTED PER THE AASHTO T-11 WASH LOST TEST.
8. GEOTEXTILE SHALL CONSIST OF POLYPROPYLENE FIBERS AND MEET THE FOLLOWING SPECIFICATIONS:

   GRAB TENSILE STRENGTH (ASTM-D4632) > OR = 120 LBS.
   MULLEN BURST STRENGTH (ASTM-D3786) > OR = 225 LBS.
   FLOW RATE (ASTM-D4491) > OR = 95 GAL./MIN./FT²
   UV RESISTANCE AFTER 500 HRS. (ASTM-D4355) > OR = 70%
   HEAT-SET OR HEAT CALENDARED FABRICS ARE NOT PERMITTED

PWD STANDARD BIOINFILTRATION/BIORETENTION BASIN DETAIL

C-18 **BIOINFILTRATION BASIN PROFILE**

NOT TO SCALE

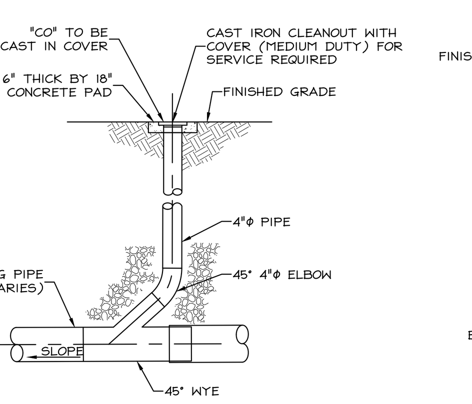

NOTES:

1. ALL PIPE AND JOINT MATERIAL TO MATCH TYPE OF EXISTING PIPE

C-19 **CLEANOUT - STORM**

NOT TO SCALE

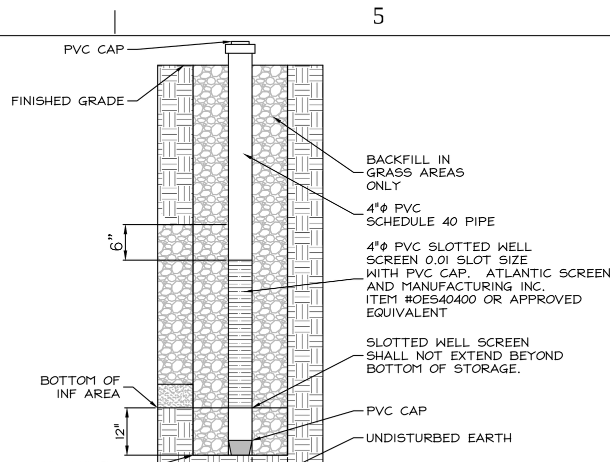

C-21 **OBSERVATION WELL IN PARKING AREA**

NOT TO SCALE

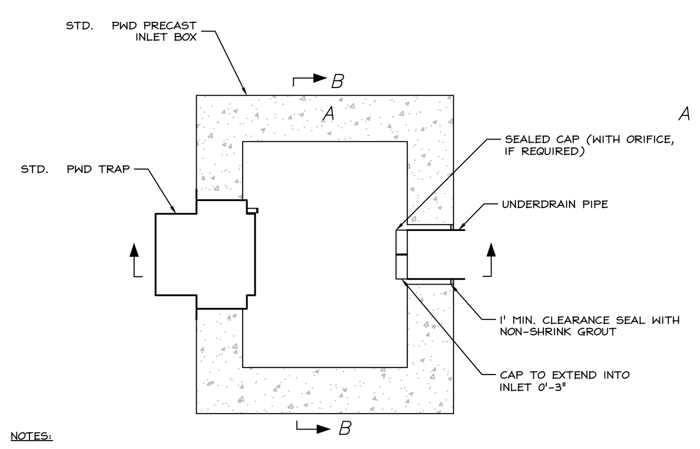

NOTES:

1. ALL CONCRETE COMPONENTS, INLET GRATE AND FRAME, INLET TRAP, AND CONNECTION TO SEWER SHALL BE PWD STANDARD CONSTRUCTION.
2. HIGHWAY INLET DEPICTED; DESIGN IS GENERALLY APPLICABLE TO ALL PWD STANDARD INLETS.
3. THIS INLET HAS A SEWER CONNECTION AND AN UNDERDRAIN ONLY FROM A STORMWATER SYSTEM (SMP).
4. TOTAL EXTENSION OF UNDERDRAIN AND CAP ASSEMBLY INTO INLET TO BE 0'-3" FROM INLET WALL TO END OF CAP

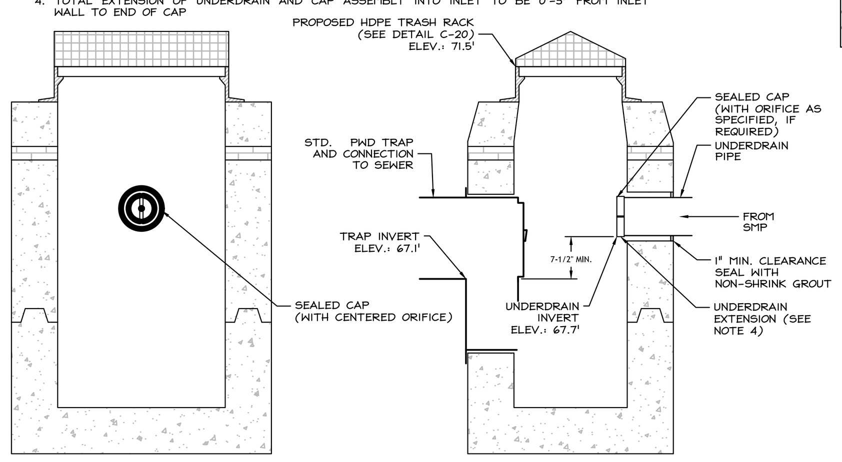

PWD STANDARD UNDERDRAIN CONNECTION DETAIL

C-22 **OUTLET STRUCTURE**

NOT TO SCALE

Square/Rectangular Trash Racks

(Standard Sizes)

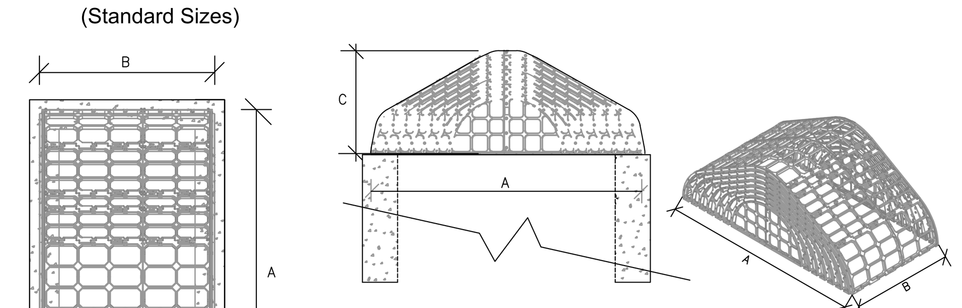

Dimension Codes (A, B, C)											
Width A	55 1/2"	67 1/2"	79"	91"	103"	115"	126 1/4"				
Code	04	05	06	07	08	09	010				
Length B	29"	40 3/4"	54 1/8"	66"	79"	93 1/8"	105 1/4"	117 1/8"	131 1/8"	143 1/4"	155 1/4"
Code	02	03	04	05	06	07	08	09	010	011	012
Height C	27 5/8"	31 1/4"	34 3/4"	38 1/8"	41 3/4"	45 1/4"	48 1/4"				
Code	A=04	A=05	A=06	A=07	A=08	A=09	A=010				

PEAK ROOF ______" ______" ______"
Width A Length B Height C

C-20 **TRASH RACK DETAIL**

N.T.S.

GENERAL OPERATIONS AND MAINTENANCE NOTES

1. OWNERSHIP, OPERATION AND MAINTENANCE OF THE STORMWATER FACILITIES (SMPs) SHALL BE THE RESPONSIBILITY OF THE LANDOWNER OR OTHER ENTITY, HIS SUCCESSORS AND ASSIGNS IN PERPETUITY, UNLESS SPECIFICALLY IDENTIFIED OTHERWISE HEREIN. THE PERSON INSPECTING THE SMPs MUST BE FAMILIAR WITH STORMWATER MANAGEMENT AND PWD RECOMMENDATIONS. THE OWNER OR HIS DESIGNEE MUST INSPECT, PERFORM ROUTINE MAINTENANCE, REPAIR, AND REPLACE (SMPs) AS REQUIRED. SOME ASPECTS OF INSPECTION REQUIRE CERTIFICATION, SUCH AS CONFINED SPACE ENTRY.
2. SMPs AND CONVEYANCES SHALL BE OPERATED AND MAINTAINED IN GOOD WORKING CONDITION TO ENSURE THAT THEY PERFORM THEIR DESIGN FUNCTION IN A MANNER ACCEPTABLE TO THE PHILADELPHIA WATER DEPARTMENT (PWD) OR PENNSYLVANIA DEPARTMENT OF ENVIRONMENTAL PROTECTION. SMPs SHALL BE INSPECTED ON THE FOLLOWING BASIS UNLESS SPECIFIED DIFFERENTLY IN THE FOLLOWING SECTIONS.
3. INSPECT FOUR TIMES A YEAR AND AFTER EVERY LARGE STORM EVENTS.
4. DOCUMENTATION OF INSPECTIONS MUST BE MAINTAINED BY THE OWNER AND SUBMITTED TO PWD.

VEGETATED AREA O&M NOTES

INSPECTION:
1. INSPECT THE AMOUNT OF PERMANENT VEGETATIVE COVER ON THE SOIL SURFACE.
2. BIWEEKLY INSPECTIONS ARE RECOMMENDED FOR AT LEAST THE FIRST GROWING SEASON, OR UNTIL THE VEGETATION IS PERMANENTLY ESTABLISHED.
3. ONCE THE VEGETATION IS ESTABLISHED, INSPECTIONS OF HEALTH, DIVERSITY, AND DENSITY SHOULD BE PERFORMED AT LEAST FOUR TIMES PER YEAR, DURING THE GROWING AND NON-GROWING SEASON.

MAINTENANCE:
1. IF PERMANENT VEGETATIVE COVER FALLS BELOW 70% OF THE SOIL SURFACE AREA, RE-SEED OR OVER-SEED IN ACCORDANCE WITH THE PERMANENT SEEDING SPECIFICATIONS.
2. APPLY LIME AND FERTILIZER IN ACCORDANCE WITH RECOMMENDATIONS BASED ON SOIL TESTING.
3. MOW MEADOW AREAS TWICE ANNUALLY. ALL MOWED VEGETATION TO BE REMOVED AND DISPOSED OF APPROPRIATELY. MOWING SHOULD BE DONE ONLY WHEN THE SOIL IS DRY IN ORDER TO PREVENT TRACKING DAMAGE TO VEGETATION, SOIL COMPACTION, AND FLOW CONCENTRATIONS.

VEGETATED SWALE, FILTER STRIP AND BERM O&M NOTES

INSPECTION SCHEDULE:
INSPECTION TO BE PERFORMED FOUR TIMES ANNUALLY AND WITHIN 48 HOURS AFTER EVERY SIGNIFICANT RAINFALL EVENT (2 INCHES OF RAINFALL IN A 24 HOUR PERIOD).
1. INSPECT AND CORRECT EROSION PROBLEMS, DAMAGE TO VEGETATION, AND SEDIMENT AND DEBRIS ACCUMULATION (ADDRESS WHEN >3 INCHES AT ANY SPOT OR COVERING VEGETATION).
2. INSPECT VEGETATION ON SIDE SLOPES FOR EROSION AND FORMATION OF GULLIES.
3. INSPECT FOR POOLS OF STANDING WATER.
4. INSPECT FOR LITTER AND DEBRIS; REMOVE PRIOR TO MOWING.
5. INSPECT FOR UNIFORMITY IN CROSS-SECTION AND LONGITUDINAL SLOPE, CORRECT AS NEEDED.
6. INSPECT SWALES, CHECK DAMS AND OUTLETS FOR EROSION OR BLOCKAGE; CORRECT AS NEEDED.

MAINTENANCE ACTIVITIES TO BE PERFORMED AS NEEDED:
1. PLANT ALTERNATIVE GRASS SPECIES IN THE EVENT OF UNSUCCESSFUL ESTABLISHMENT.
2. RE-SEED BARE AREAS; INSTALL APPROPRIATE EROSION CONTROL MEASURES WHEN NATIVE SOIL IS EXPOSED OR EROSION CHANNELS ARE FORMING.
3. ROTOTILL AND REPLANT SWALE IF STANDING WATER EXISTS FOR MORE THAN 48 HOURS.
4. WATER DURING DRY PERIODS, FERTILIZE, AND APPLY PESTICIDE ONLY WHEN ABSOLUTELY NECESSARY.
5. REMOVE DEBRIS AND/OR SEDIMENT FROM SWALES AND DIVERSION BERMS.
6. IF PERMANENT VEGETATIVE COVER FALLS BELOW 70% OF THE SOIL SURFACE OF THE SWALES AND DIVERSION BERMS, RE-SEED OR OVER-SEED IN ACCORDANCE WITH THE PERMANENT SEEDING SPECIFICATIONS.
7. MOW ONLY WHEN DRY AND TRIM VEGETATION TO ENSURE PROPER SWALE OPERATION.

STORMWATER PIPES GREEN INLETS AND APPURTENANCES O&M NOTES

INSPECTION (FOUR TIMES PER YEAR AND AFTER LARGE STORM EVENTS):
1. INSPECT STORMWATER PIPES AND APPURTENANCES FOR DEBRIS AND/OR SEDIMENT.
2. INSPECT THE STRUCTURAL INTEGRITY OF STORMWATER PIPES AND APPURTENANCES.
3. GREEN INLET SUMPS AND FILTER INSERTS FOR TRASH AND SEDIMENT ACCUMULATION.

MAINTENANCE:
1. REMOVE AND/OR FLUSH DEBRIS AND/OR SEDIMENT FROM STORMWATER PIPES AND APPURTENANCES.
2. REPAIR OR REPLACE DAMAGED STORMWATER PIPES AND APPURTENANCES.
3. REMOVE, CLEAN (ANNUALLY) AND REPLACE GREEN INLET INSERTS PER MFG. RECOMMENDATIONS.
4. PUMP ACCUMULATED SEDIMENT FROM GREEN INLET SUMPS SEMI-ANNUALLY OR AS NEEDED.

RIPRAP OUTLET PROTECTION O&M NOTES

INSPECTION (FOUR TIMES PER YEAR AND AFTER LARGE STORM EVENTS):
1. INSPECT FOR EROSION AT OUTLETS.
2. INSPECT FOR LOSS OF ROCK.

MAINTANENCE:
1. IF THE ROCK SIZE IS NOT ADEQUATE TO PREVENT EROSION, INSTALL ROCK OF A LARGER SIZE.
2. REPLACE ROCK TO MAINTAIN THE ORIGINAL DESIGN SPECIFICATIONS & CLEAN SEDIMENT.

INFILTRATION COMPONENT OF BIORETENTION/BIOINFILTRATION FACILITIES

INSPECTION (FOUR TIMES PER YEAR AND AFTER LARGE STORM EVENTS):
1. OBSERVATIONS SHALL BE MADE TO DETERMINE THE LENGTH OF TIME NEEDED FOR RETAINED WATER TO INFILTRATE INTO THE SOIL AFTER A STORM EVENT. THE OBSERVATIONS SHALL BE MADE BY READING THE WATER LEVEL OBSERVATION WELLS OF THE UNDERGROUND SYSTEM(S). MEASUREMENTS SHOULD BE TAKEN AFTER EACH RAIN EVENT OF 0.5-INCHES OR MORE, OR FOUR TIMES ANNUALLY.
2. INSPECT INLETS, AND OUTLET STRUCTURES MONTHLY FOR THE FIRST YEAR AND FOUR TIMES A YEAR THERE AFTER, INCLUDING PIPES, FOR TRASH, SEDIMENT AND DAMAGE. REPAIR AS NEEDED. ACCESS TO OUTLET STRUCTURES REQUIRES CONFINED SPACE CERTIFICATION.

MAINTENANCE PROCEDURES FOR INFILTRATION BEDS SHALL INCLUDE:
- CATCH BASINS AND INLETS SHOULD BE INSPECTED AND CLEANED AT LEAST 4 TIMES PER YEAR.
- THE OVERLYING SURFACE OF SUBSURFACE INFILTRATION SHOULD BE MAINTAINED (SEE BIORETENTION/BIOINFILTRATION OPERATION AND MAINTENANCE NOTES.
- REMOVE ANY ACCUMULATED SEDIMENT, TRASH, PETROLEUM RESIDUE AND DISPOSE OF PROPERLY. REPAIR ANY CHIPS CRACKS OR LEAKS IN OUTLET STRUCTURES.
- IF STANDING WATER IS OBSERVED FOR MORE THAN 72-HOURS, CONTACT PWD AND BEGIN REPAIRS AS DIRECTED BY AN ENGINEER.

OBSTRUCTIONS AND DEBRIS

ALL STORMWATER MANAGEMENT FACILITIES SHALL BE CLEARED OF ALL DEBRIS AND LITTER ON A REGULAR BASIS AND AFTER ALL MAJOR STORM EVENTS. ADDITIONALLY, FLOATING DEBRIS SHALL BE REMOVED, AND THE FACILITY SHALL BE INSPECTED FOR VISIBLE POLLUTION OR SHORELINE PROBLEMS. ERODED CHANNELS OR AREAS OF EXCESSIVE EROSION NEAR THE FACILITY SHALL BE BACKFILLED AND STABILIZED IMMEDIATELY.

SEDIMENT ACCUMULATION

MONITOR SEDIMENT ACCUMULATIONS IN ALL STORMWATER MANAGEMENT AND WATER QUALITY FACILITIES. REMOVE SEDIMENT IF STORAGE VOLUMES HAVE BEEN REDUCED SIGNIFICANTLY OR THE POOLS BECOME STAGNANT. ACCUMULATED SEDIMENT SHALL BE REMOVED FROM THE STORMWATER MANAGEMENT AND WATER QUALITY FACILITIES ON A REGULAR BASIS (EVERY 2 TO 10 YEARS FOR DRY DETENTION BASINS AND EVERY 5 TO 15 YEARS FOR WET POND FACILITIES) AND SHALL EITHER BE REMOVED FROM THE SITE OR DISPOSED OF ON-SITE AT AN APPROVED DISPOSAL AREA. MAINTENANCE OF CATCH BASINS AND INLETS IS BEST DONE MONTHLY WITH A VACUUM TRUCK. ALL COLLECTED WASTE MUST BE HANDLED AND DISPOSED OF ACCORDING TO LOCAL ENVIRONMENTAL REQUIREMENTS. PRIOR TO ON-SITE DISPOSAL OF SEDIMENT, THE OWNER SHALL ACQUIRE THE APPROPRIATE EARTH DISTURBANCE PERMITS FROM THE MUNICIPALITY AND/OR THE CONSERVATION DISTRICT.

RAIN GARDENS

AT A MINIMUM, OPERATION AND MAINTENANCE PROCEDURES FOR THE RAIN GARDENS SHALL INCLUDE:

- WHILE VEGETATION IS BEING ESTABLISHED, PRUNING AND WEEDING MAY BE REQUIRED.
- DETRITUS MAY ALSO NEED TO BE REMOVED EVERY YEAR. PERENNIAL PLANTINGS MAY BE CUT DOWN AT THE END OF THE GROWING SEASON.
- MULCH SHOULD BE RE-SPREAD WHEN EROSION IS EVIDENT AND BE REPLENISHED AS NEEDED. ONCE EVERY 2 TO 3 YEARS THE ENTIRE AREA MAY REQUIRE MULCH REPLACEMENT.
- BIORETENTION AREAS SHOULD BE INSPECTED AT LEAST TWO TIMES PER YEAR FOR SEDIMENT BUILDUP, EROSION, VEGETATIVE CONDITIONS, ETC.
- DURING PERIODS OF EXTENDED DROUGHT, BIORETENTION AREAS MAY REQUIRE WATERING.
- TREES AND SHRUBS SHOULD BE INSPECTED TWICE PER YEAR TO EVALUATE HEALTH.

OUTLET STRUCTURE:

- DURING LOW WATER CONDITIONS, CONCRETE SPILLWAY STRUCTURES SHALL BE INSPECTED TO DETERMINE IF WATER IS PASSING THROUGH ANY JOINTS OR OTHER STRUCTURE CONTACTS AND TO IDENTIFY ANY CRACKS, SPALLING, BROKEN OR LOOSE SECTIONS. ANY CRACKED, SPALLED, BROKEN OR LOOSE SECTIONS SHALL BE CLEANED AND REFILLED WITH AN APPROPRIATE CONCRETE PATCHING MATERIAL. A PROFESSIONAL ENGINEER SHALL BE CONSULTED TO REPAIR EXTENSIVE LEAKAGE, SPALLS OR FRACTURES.
- ANY REPAIRS MADE TO THE PRINCIPAL SPILLWAY (RISER OR BARREL) SHALL BE REVIEWED BY A PROFESSIONAL ENGINEER. VERTICAL TRENCHING TO EXPOSE THE BARREL SHALL NOT BE ALLOWED UNDER ANY CIRCUMSTANCES. THE TRENCH SIDE SLOPES SHALL BE STEPPED BACK AT A 2:1 SLOPE, MINIMUM.

EARTH EMBANKMENT:

- ALL ANIMAL BURROWS SHALL BE BACKFILLED AND COMPACTED AND BURROWING ANIMALS SHALL BE REMOVED FROM THE AREA.
- ALL TREES, WOODY VEGETATION, AND OTHER DEEP-ROOTED GROWTH, INCLUDING STUMPS AND ASSOCIATED ROOT SYSTEMS, SHALL BE REMOVED FROM THE EMBANKMENT TOE AND ABUTMENT CONTACTS. THE ROOT SYSTEMS SHALL BE EXTRACTED AND THE EXCAVATED VOLUME REPLACED AND COMPACTED WITH MATERIAL SIMILAR TO THE SURROUNDING AREA. ALL SEEDLINGS SHALL BE REMOVED AT THE FIRST OPPORTUNITY. SIMILARLY, ANY VINE COVER AND BRUSH SHALL BE REMOVED FROM THE EMBANKMENT TO ALLOW FOR INSPECTIONS.

BIORETENTION/INFILTRATION MATERIAL SPECIFICATIONS

1. STONE DESIGNED FOR STORMWATER STORAGE SHALL BE UNIFORMLY GRADED, CRUSHED, CLEAN-WASHED STONE AND THAT IT IS NOTED THAT PWD DEFINES "CLEAN-WASHED" AS HAVING LESS THAN 0.5% WASH LOSS, BY MASS, WHEN TESTED PER THE AASHTO T-11 WASH LOSS TEST. AASHTO NO. 3 AND NO. 57 STONE CAN MEET THIS SPECIFICATION.
2. SAND SHALL BE AASHTO M-6 OR ASTM C-33 SAND AND TO HAVE A GRAIN SIZE OF 0.02 INCHES TO 0.04 INCHES.
3. PLANTING SOIL MEDIUM SHALL BE A FERTILE, NATURAL SOIL, FREE FROM LARGE STONES, ROOTS, STICKS, CLODS, PLANTS, PEAT, SOD, POCKETS OF COARSE SAND, PAVEMENT AND BUILDING DEBRIS, GLASS, NOXIOUS WEEDS INCLUDING INVASIVE SPECIES, INFESTATIONS OF UNDESIRABLE ORGANISMS AND DISEASE CAUSING PATHOGENS, AND OTHER EXTRANEOUS MATERIALS HARMFUL TO PLANT GROWTH. THE PH OF THE PLANTING SOIL SHALL HAVE A RANGE OF 5.8 TO 7.1. SOLUBLE SALTS SHALL BE LESS THAN 2.0 MMHOS/CM (DS/M).
4. THE TEXTURE OF PLANTING SOIL SHALL CONFORM TO THE CLASSIFICATION WITHIN THE UNITED STATES DEPARTMENT OF AGRICULTURE TRIANGLE FOR SANDY LOAM OR LOAMY SAND. PLANTING SOIL SHALL BE A MIXTURE OF SAND, SILT, AND CLAY PARTICLES AS REQUIRED TO MEET THE CLASSIFICATION. RANGES OF PARTICLE SIZE DISTRIBUTION, AS DETERMINED BY PIPETTE METHOD IN COMPLIANCE WITH ASTM F-1632, ARE AS FOLLOWS: SAND (0.05 TO 2.0 MM): 50 - 85%: SILT (0.002 TO 0.05MM): 40% MAXIMUM: CLAY (LESS THAN 0.002MM): 10% MAXIMUM: GRAVEL (2.0 TO 12.7 MM): 15% MAXIMUM. ORGANIC CONTENT OF PLANTING SOIL SHOULD HAVE A RANGE OF 3% TO 15%, BY WEIGHT.
5. PLANTING SOIL SHALL BE SCREENED AND FREE OF STONES LARGER THAN A HALF-INCH (12.7 MILLIMETERS) IN ANY DIMENSION. NO MORE THAN 10% OF THE SOIL VOLUME SHOULD BE COMPOSED OF SOIL PEDS GREATER THAN ONE INCH. CLODS, OR NATURAL CLUMPS OF SOILS, GREATER THAN THREE INCHES IN ANY DIMENSION SHALL BE ABSENT FROM THE PLANTING SOIL. SMALL CLODS RANGING FROM ONE TO THREE INCHES AND PEDS, NATURAL SOIL CLUMPS UNDER ONE INCH IN ANY DIMENSION, MAY BE PRESENT BUT SHOULD NOT MAKE UP MORE THAN 10% OF THE SOIL BY VOLUME.
6. MULCH SHALL BE FREE OF WEEDS AND CONSISTING OF AGED, DOUBLE-SHREDDED HARDWOOD BARK MULCH OR LEAF MULCH THAT HAS BEEN SHREDDED SUFFICIENTLY TO LIMIT RISK OF MATTING.
7. GEOTEXTILE IS SPECIFIED ON THE PLANS TO CONSIST OF POLYPROPYLENE FIBERS AND TO MEET THE FOLLOWING SPECIFICATIONS (AASHTO CLASS 1 OR CLASS 2 GEOTEXTILE IS RECOMMENDED): GRAB TENSILE STRENGTH (ASTM-D4632): ≥ 120 LBS: MULLEN BURST STRENGTH (ASTM-D3786): ≥ 225 PSI: FLOW RATE (ASTM-D4491): ≥ 95 GAL/MIN/FT2: UV RESISTANCE AFTER 500 HRS (ASTM-D4355): ≥ 70%: HEAT-SET OR HEAT-CALENDARED FABRICS ARE NOT PERMITTED
8. NATIVE GRASS/WILDFLOWER SEED MIX, IF PROPOSED AS AN ALTERNATIVE TO GROUNDCOVER PLANTING, SHALL BE FREE OF WEED SEEDS.
9. PLANTINGS SHALL BE AS INDICATED ON THE PLANS AND SHALL BE NON-INVASIVE.
10. UNDERDRAIN SHALL BE MADE OF CONTINUOUSLY PERFORATED HIGH-DENSITY POLYETHYLENE (HDPE) PLASTIC PIPING WITH A SMOOTH INTERIOR AND A MINIMUM INNER DIAMETER OF FOUR INCHES. HDPE PIPE SHALL MEET THE SPECIFICATIONS OF AASHTO M252, TYPE S OR AASHTO M294, TYPE S. [SECTION 4.1.4, 12]
11. CLEANOUTS SHALL BE MADE OF SCHEDUAL 40 PVC PLASTIC WITH A SMOOTH INTERIOR HAVING A MINIMUM INNER DIAMETER OF FOUR INCHES.
12. SUBSOIL MUST BE FREE OF HARD CLODS, STIFF CLAY, HARDPAN, ASHES, SLAG, CONSTRUCTION DEBRIS, PETROLEUM HYDROCARBONS, AND OTHER UNDESIRABLE MATERIALS AND MUST NOT BE FROZEN OR IN A MUDDY STATE.

BIORETENTION/INFILTRATION CONSTRUCTION INSPECTION NOTES

1. VERIFY THAT THE STONE STORAGE LAYER IS SEPARATED FROM SOIL MEDIA BY A GEOTEXTILE OR PEA GRAVEL FILTER TO PREVENT SAND, SILT, AND SEDIMENT FROM ENTERING THE SMP.
2. VERIFY THAT THE PLANTING SOIL MEDIUM HAS A MINIMUM DEPTH OF TWO FEET.
3. VERIFY THAT ANY IMPERVIOUS LINER, IF NECESSARY, IS NOT INTERRUPTED BY STRUCTURES WITHIN THE BASIN FOOTPRINT.
4. VERIFY THAT AN UNDERDRAIN IS PROVIDED AND THAT IT IS BE SURROUNDED BY A SAND OR STONE LAYER A MINIMUM SIX INCHES ON ALL SIDES.
5. FOR BIORETENTION SMPS LOCATED IN THE COMBINED SEWER AREA WHERE INFILTRATION IS INFEASIBLE, UNDERDRAINS MUST BE CAPPED WITH AN APPROPRIATELY SIZED ORIFICE.
6. VERIFY THAT CLEANOUTS, MANHOLES, ACCESS PANELS AND OTHER ACCESS FEATURES ALLOW UNOBSTRUCTED AND SAFE ACCESS TO THE BIOINFILTRATION/BIORETENTION SMP FOR ROUTINE MAINTENANCE AND INSPECTION OF INFLOW, OUTFLOW, UNDERDRAINS, AND STORAGE SYSTEMS.
7. VERIFY OUTLET CONTROL STRUCTURE IS INSTALLED ACCORDING TO THE PLANS
8. VERIFY THAT PLANTING SOIL MEDIA IS PLACED TO A DEPTH AND AS SPECIFIED ON THE PLANS.
9. VERIFY THAT MULCH IS PLACED TO A DEPTH AND AS SPECIFIED ON THE PLANS.
10. VERIFY THAT PLANTING IS DONE IN ACCORDANCE WITH THE PLANS.

BIORETENTION/INFILTRATION OPERATION & MAINTENANCE NOTES

1. WATER VEGETATION AT THE BEGINNING OF EACH DAY FOR EIGHT WEEKS AFTER PLANTING IS COMPLETED. DAILY FOR EIGHT WEEKS AFTER INSTALLATION.
2. WATER VEGETATION REGULARLY TO ENSURE SUCCESSFUL ESTABLISHMENT. EVERY FOUR DAYS DURING PERIODS OF FOUR OR MORE DAYS WITHOUT RAIN, JUNE THROUGH AUGUST FOR THE 24 MONTHS AFTER INSTALLATION.
3. INSPECT VEGETATION FOR SIGNS OF DISEASE OR DISTRESS. BIWEEKLY FOR THE FIRST YEAR AFTER INSTALLATION
4. AFTER ALL STORMS GREATER THAN 1-INCH, VERIFY THAT THE FACILITY DRAINS WITHIN THE ACCEPTABLE 72-HOUR PERIOD. MINIMUM TWICE A YEAR
5. INSPECT INLET CONTROLS, OUTLET STRUCTURES, AND STORAGE AREAS FOR TRASH AND SEDIMENT ACCUMULATION. MONTHLY FOR THE FIRST YEAR AFTER INSTALLATION TO DETERMINE ONGOING MAINTENANCE FREQUENCY.
6. REMOVE TRASH AND DEBRIS FROM FOREBAY, POND, AND OUTLET STRUCTURE. AS NEEDED.
7. REMOVE TRASH AND DEBRIS FROM EMERGENCY SPILLWAY, DOWNSTREAM CHANNEL AND LEVEL SPREADER (IF APPLICABLE). AS NEEDED.
8. REPAIR ANY EROSION OR RILLS THAT APPEAR AT ANY LOCATION ALONG FLOW PATH FROM EMERGENCY SPILLWAY TO THE RECEIVING STREAM OR SEWER, OR IF APPLICABLE BELOW LEVEL SPREADER. AS NEEDED.
9. MAINTAIN VIGOROUS GROWTH OF MOWED GRASS ALONG FLOW PATH FROM EMERGENCY SPILLWAY TO THE RECEIVING STREAM OR SEWER, OR IF APPLICABLE BELOW LEVEL SPREADER. MOW TO A 6-INCH HEIGHT. AS NEEDED WITH A MINIMUM OF TWICE A YEAR.
10. REMOVE NON-TARGET/INVASIVE VEGETATION. AS NEEDED
11. GRASSED AREAS REQUIRE PERIODIC PRUDENT FERTILIZING, DETHATCHING AND SOIL CONDITIONING. AS NEEDED WITH A MINIMUM OF ONCE EVERY 5-YEARS.
12. TREES, SHRUBS, AND OTHER VEGETATIVE COVER WILL REQUIRE PERIODIC MAINTENANCE SUCH AS FERTILIZING, PRUNING AND PEST CONTROL. AS NEEDED.
13. MOW/TRIM VEGETATION ON EMBANKMENT OR SLOPES. AS NEEDED WITH A MINUMUM OF ONCE A YEAR.
14. DREDGE LARGE VOLUMES OF SEDIMENT AND ORGANIC DEBRIS FROM BASIN AND FOREBAY AREAS OR WHEN LESS THAN 50% OF THE FOREBAY VOLUME REMAINS. AS NEEDED AND AT LEAST ONCE EVERY FIVE TO TEN YEARS.
15. INSPECT OUTLET CONTROL STRUCTURE FOR CLOGGING. QUARTERLY AND AFTER EVERY STORM GREATER THAN ONE INCH.
16. INSPECT FOR POTENTIAL PROBLEMS, INCLUDING: SUBSIDENCE, EROSION, CRACKING, OR TREE GROWTH ON THE EMBANKMENT; DAMAGE TO THE EMERGENCY SPILLWAY; SEDIMENT ACCUMULATION AROUND THE OUTLET; INADEQUACY OF THE INLET/OUTLET CHANNEL EROSION CONTROL MEASURES; CHANGES IN THE CONDITION OF THE PILOT CHANNEL; AND EROSION WITHIN THE SMP AND ITS BANKS. ANNUALLY.
17. MAINTAIN RECORDS OF ALL INSPECTIONS AND MAINTENANCE ACTIVITY. ONGOING.

PCSM SEQUENCE

1. AT LEAST SEVEN (7) DAYS PRIOR TO ANY EARTH DISTURBANCE, THE INSPECTIONS COORDINATOR OF PWD (OFFICE: 215-685-6387) MUST BE CALLED TO SCHEDULE A PRECONSTRUCTION MEETING.
2. AT LEAST THREE (3) DAYS PRIOR TO LEVEL SPREADER, VEGETATED SWALE, AND BIOINFILTRATION BASIN INSTALLATION, THE INSPECTIONS COORDINATOR OF PWD (OFFICE: 215-685-6387) MUST BE CALLED TO SCHEDULE AN INSPECTION (FOR EACH SMP).
3. ALL STONE THAT MAKES UP THE BIOINFILTRATION BASIN MUST REMAIN FREE OF SEDIMENT. IF SEDIMENT ENTERS THE STONE, THE CONTRACTOR MAY BE REQUIRED TO REMOVE THE SEDIMENT AND REPLACE IT WITH CLEAN-WASHED STONE.
4. UPON COMPLETION OF ALL EARTH DISTURBANCE ACTIVITIES AND PERMANENT STABILIZATION OF ALL DISTURBED AREAS, THE OWNER AND/OR OPERATOR SHALL CONTACT INSPECTIONS COORDINATOR OF PWD (OFFICE: 215-685-6387) FOR A FINAL INSPECTION PRIOR TO REMOVAL/CONVERSION OF THE E&S BMPS.
5. AS SOON AS SLOPES, CHANNELS, DITCHES, AND OTHER DISTURBED AREAS REACH FINAL GRADE, THEY MUST BE STABILIZED. CESSATION OF ACTIVITY FOR FOUR (4) DAYS OR LONGER REQUIRES TEMPORARY STABILIZATION.
6. THE NPDES NOTICE OF TERMINATION (N.O.T.) MUST BE SUBMITTED TO PA DEP UPON COMPLETION OF CONSTRUCTION (WHEN APPLICABLE).
7. WATER PUMPED FROM WORK AREAS SHOULD BE TREATED FOR SEDIMENT REMOVAL PRIOR TO DISCHARGING TO A "SURFACE WATER" (WHEN APPLICABLE).
8. THE CONTRACTOR SHALL PROCEED AS FOLLOWS:

8.a. DO NOT OPERATE EQUIPMENT ON SOIL SURFACE AND MINIMIZE SOIL DISTURBANCE AND COMPACTION DURING CONSTRUCTION.
8.b. BIOINFILTRATION AREA SHALL BE CLEARLY MARKED IN THE FIELD BEFORE ANY SITE WORK BEGINS.
8.c. INSTALL ALL TEMPORARY EROSION AND SEDIMENTATION CONTROLS IN THE IMMEDIATELY ADJACENT WORK AREAS IN ACCORDANCE WITH THE LATEST EDITION OF THE PENNSYLVANIA DEPARTMENT OF ENVIRONMENTAL PROTECTION (PA DEP) EROSION AND SEDIMENT POLLUTION CONTROL PROGRAM MANUAL PRIOR TO CONSTRUCTION.
8.d. CLEAR THE AREAS TO BE EXCAVATED OF ALL VEGETATION. REMOVE ALL TREE ROOTS, ROCKS, AND BOULDERS IN EXCAVATION AREAS.
8.e. EXCAVATE AREAS TO DESIRED ELEVATION.
8.f. CONSTRUCT EMBANKMENT.
8.g. PLACE FILTER FABRIC THEN PLACE THE ROCK AND SET THE UNDERDRAIN ACCORDING TO THE PLANS.
8.h. PREPARE SUBGRADE FOR OUTLET STRUCTURES.
8.i. INSTALL OUTLET CONTROLS ACCORDING TO PLANS. OUTLET CONTROLS MUST BE CONSTRUCTED IN ACCORDANCE WITH MANUFACTURER'S GUIDELINES OR THE DESIGN PROFESSIONAL'S GUIDANCE. OUTLET CONTROLS MUST COMPLY WITH ALL APPLICABLE AMERICAN SOCIETY OF TESTING AND MATERIALS (ASTM) TESTING METHODS AS REQUIRED BY PWD.
8.j. CONFIRM INVERT ELEVATIONS AND DIMENSIONS OF OUTLET CONTROLS PRIOR TO FINAL BACKFILL AND COMPACTION OF SURROUNDING AREAS.
8.k. BACKFILL AND COMPACT AREAS AROUND OUTLET CONTROLS. ENSURE BACKFILL IS PROPERLY COMPACTED IN ACCORDANCE WITH SPECIFICATIONS.
8.l. PLACE FILTER FABRIC OVER STONE.
8.m. PLACE BIORETENTION MEDIA TO DEPTH SPECIFIED ON PLANS.
8.n. PLACE MULCH TO DEPTH INDICATED ON THE PLANS
8.o. INSTALL PLANTING IN ACCORDANCE WITH PLANS.
8.p. ONCE SITE VEGETATION IS STABILIZED, REMOVE EROSION AND SEDIMENT CONTROL MEASURES.

PCSM NOTES

SPECIAL SOILS AND GEOLOGIC CONDITIONS

EXISTING SUBSURFACE CONDITIONS WITHIN THE LIMIT OF DISTURBANCE IDENTIFIED ON THE PLANS ARE DESCRIBED IN THE PROJECT SUBSURFACE EXPLORATION & GEOTECHNICAL REPORT PREPARED BY DAVID BLACKMORE & ASSOCIATES, INC. (DBA). THE CONTRACTOR SHALL REVIEW THESE DOCUMENTS TO BECOME FAMILIAR WITH SITE GEOTECHNICAL AND SOILS CONDITIONS PRIOR TO INITIATING WORK.

BUILDING AND DEMOLITION MATERIALS

ALL EXCESS BUILDING MATERIALS AND WASTE SHALL BE REMOVED FROM THE SITE AND RECYCLED OR DISPOSED OF IN ACCORDANCE WITH THE PENNSYLVANIA DEPARTMENT OF ENVIRONMENTAL RESOURCES (DEPARTMENT) SOLID WASTE MANAGEMENT REGULATIONS AT 25 PA CODE 260.1 ET SEQ.,271.1, AND 287.1 ET. SEQ. NO BUILDING MATERIALS OR WASTES OR UNUSED BUILDING MATERIALS SHALL BE BURNED, BURIED, DUMPED, OR DISCHARGED AT THIS SITE.

ALL OFF-SITE WASTE AND BORROW AREAS MUST HAVE AN E&S PLAN APPROVED BY THE LOCAL CONSERVATION DISTRICT OR THE DEPARTMENT FULLY IMPLEMENTED PRIOR TO BEING ACTIVATED.

THE CONTRACTOR IS RESPONSIBLE FOR ENSURING THAT ANY MATERIAL BROUGHT ON SITE IS CLEAN FILL. FORM FP-001 MUST BE RETAINED BY THE PROPERTY OWNER FOR ALL FILL MATERIAL AFFECTED BY A SPILL OR RELEASE OF A REGULATED SUBSTANCE BUT QUALIFYING AS CLEAN FILL DUE TO ANALYTICAL TESTING.

PERMIT TERMINATION

UPON PERMANENT STABILIZATION OF THE EARTH DISTURBANCE ACTIVITY UNDER §102.22(A)(2) (RELATING TO PERMANENT STABILIZATION), AND INSTALLATION OF BMPS IN ACCORDANCE WITH AN APPROVED PLAN PREPARED AND IMPLEMENTED IN ACCORDANCE WITH §§102.4 AND 102.8 (RELATING TO EROSION AND SEDIMENT CONTROL REQUIREMENTS; AND PCSM REQUIREMENTS), THE PERMITTEE OR CO-PERMITTEE SHALL SUBMIT A NOTICE OF TERMINATION TO THE DEPARTMENT OR CONSERVATION DISTRICT.

THE NOTICE OF TERMINATION MUST INCLUDE:

1. THE FACILITY NAME, ADDRESS AND LOCATION.
2. THE OPERATOR NAME AND ADDRESS.
3. THE PERMIT NUMBER.
4. THE REASON FOR PERMIT TERMINATION.
5. IDENTIFICATION OF THE PERSONS WHO HAVE AGREED TO AND WILL BE RESPONSIBLE FOR LONG-TERM OPERATION AND MAINTENANCE OF THE PCSM BMPS IN ACCORDANCE WITH §102.8(M) AND PROOF OF COMPLIANCE WITH §102.8(M)(2).

PCSM REQUIREMENTS

PCSM REPORTING AND RECORDKEEPING: THE PCSM PLAN, INSPECTION REPORTS AND MONITORING RECORDS SHALL BE AVAILABLE FOR REVIEW AND INSPECTION BY THE PENNSYLVANIA DEPARTMENT OF ENVIRONMENTAL PROTECTION (DEPARTMENT) OR THE LOCAL CONSERVATION DISTRICT.

LICENSED PROFESSIONAL OVERSIGHT OF CRITICAL STAGES OF CONSTRUCTION

A LICENSED STORMWATER PROFESSIONAL OR HIS/HER QUALIFIED DESIGNEE SHALL BE PRESENT ONSITE AND BE RESPONSIBLE DURING CRITICAL STAGES OF IMPLEMENTATION OF THE APPROVED PCSM PLAN. CRITICAL STAGES REQUIRING OVERSIGHT AND REVIEW INCLUDE:
1. PHOTOS AND DOCUMENTATION REQUIRED BY PWD CONSTRUCTION CERTIFICATION PACKAGE (SEE SHEET 14 OF 14 FOR ADDITIONAL INFORMATION)
2. DURING THE CONSTRUCTION OF THE STEPPED LEVEL INFILTRATION SYSTEM.
3. BEFORE EXCAVATION TO BE SURE FLOW IS DIVERTED AROUND FACILITY
4. DURING EXCAVATION TO BE SURE NO HEAVY EQUIPMENT DAMAGES INFILTRATION AREA AND ALL EXCAVATION IS TO LINE AND GRADE.
5. DURING PLACEMENT OF GEOTEXTILE.
6. DURING PLACEMENT OF STONE, OUTLET AND PIPE.
7. DURING POROUS PAVEMENT OPERATIONS.

FINAL CERTIFICATION:

THE PERMITTEE SHALL INCLUDE WITH THE NOTICE OF TERMINATION "RECORD DRAWINGS" WITH A FINAL CERTIFICATION STATEMENT FROM A LICENSED PROFESSIONAL, WHICH READS AS FOLLOWS:
"I (NAME) DO HEREBY CERTIFY PURSUANT TO THE PENALTIES OF 18 PA.C.S.A. §4904 TO THE BEST OF MY KNOWLEDGE, INFORMATION AND BELIEF, THAT THE ACCOMPANYING RECORD DRAWINGS ACCURATELY REFLECT THE AS-BUILT CONDITIONS, ARE TRUE AND CORRECT, AND ARE IN CONFORMANCE WITH CHAPTER 102 OF THE RULES AND REGULATIONS OF THE DEPARTMENT OF ENVIRONMENTAL PROTECTION AND THAT THE PROJECT SITE WAS CONSTRUCTED IN ACCORDANCE WITH THE APPROVED PCSM PLAN, ALL APPROVED PLAN CHANGES AND ACCEPTED CONSTRUCTION PRACTICES."

DISTRIBUTION OF RECORD DRAWINGS:
1. THE PERMITTEE SHALL RETAIN A COPY OF THE RECORD DRAWINGS AS A PART OF THE APPROVED PCSM PLAN.
2. THE PERMITTEE SHALL PROVIDE A COPY OF THE RECORD DRAWINGS AS A PART OF THE APPROVED PCSM PLAN TO THE PERSON IDENTIFIED IN THIS SECTION AS BEING RESPONSIBLE FOR THE LONG-TERM OPERATION AND MAINTENANCE OF THE PCSM BMPS.

PERMITEE AND CO-PERMITTEE RESPONSIBILITIES:

UNTIL THE PERMITTEE OR CO-PERMITTEE HAS RECEIVED WRITTEN APPROVAL OF A NOTICE OF TERMINATION, THE PERMITTEE OR CO-PERMITTEE WILL REMAIN RESPONSIBLE FOR COMPLIANCE WITH THE PERMIT TERMS AND CONDITIONS INCLUDING LONG-TERM OPERATION AND MAINTENANCE OF ALL PCSM BMPS ON THE PROJECT SITE AND IS RESPONSIBLE FOR VIOLATIONS OCCURRING ON THE PROJECT SITE. THE DEPARTMENT OR CONSERVATION DISTRICT WILL CONDUCT A FINAL INSPECTION AND APPROVE OR DENY THE NOTICE OF TERMINATION WITHIN 30 DAYS.

THE PERMITTEE OR CO-PERMITTEE SHALL BE RESPONSIBLE FOR LONG-TERM OPERATION AND MAINTENANCE OF PCSM BMPS UNLESS A DIFFERENT PERSON IS IDENTIFIED IN THE NOTICE OF TERMINATION AND HAS AGREED TO LONG-TERM OPERATION AND MAINTENANCE OF PCSM BMPS.

FOR ANY PROPERTY CONTAINING A PCSM BMP, THE PERMITTEE OR CO-PERMITTEE SHALL RECORD AN INSTRUMENT WITH THE RECORDER OF DEEDS WHICH WILL ASSURE DISCLOSURE OF THE PCSM BMP AND THE RELATED OBLIGATIONS IN THE ORDINARY COURSE OF A TITLE SEARCH OF THE SUBJECT PROPERTY. THE RECORDED INSTRUMENT MUST IDENTIFY THE PCSM BMP, PROVIDE FOR NECESSARY ACCESS RELATED TO LONG-TERM OPERATION AND MAINTENANCE FOR PCSM BMPS AND PROVIDE NOTICE THAT THE RESPONSIBILITY FOR LONG-TERM OPERATION AND MAINTENANCE OF THE PCSM BMP IS A COVENANT THAT RUNS WITH THE LAND THAT IS BINDING UPON AND ENFORCEABLE BY SUBSEQUENT GRANTEES, AND PROVIDE PROOF OF FILING WITH THE NOTICE OF TERMINATION UNDER §102.7(B)(5) (RELATING TO PERMIT TERMINATION

THE PERSON RESPONSIBLE FOR PERFORMING LONG-TERM OPERATION AND MAINTENANCE MAY ENTER INTO AN AGREEMENT WITH ANOTHER PERSON INCLUDING A CONSERVATION DISTRICT, NONPROFIT ORGANIZATION, MUNICIPALITY, AUTHORITY, PRIVATE CORPORATION OR OTHER PERSON, TO TRANSFER THE RESPONSIBILITY FOR PCSM BMPS OR TO PERFORM LONG-TERM OPERATION AND MAINTENANCE AND PROVIDE NOTICE THEREOF TO THE DEPARTMENT.

A PERMITTEE OR CO-PERMITTEE THAT FAILS TO TRANSFER LONG-TERM OPERATION AND MAINTENANCE OF THE PCSM BMP OR OTHERWISE FAILS TO COMPLY WITH THIS REQUIREMENT SHALL REMAIN JOINTLY AND SEVERALLY RESPONSIBLE WITH THE LANDOWNER FOR LONG-TERM OPERATION AND MAINTENANCE OF THE PCSM BMPS LOCATED ON THE PROPERTY.

THE SCHOOL DISTRICT OF PHILADELPHIA

OFFICE OF CAPITAL PROGRAMS

440 NORTH BROAD STREET
PHILADELPHIA, PA 19130 - 4015

(215) 400 - 4730 | (215) 400 - 4731 (fax)
www.philasd.org

SEAL:

COMMONWEALTH OF PENNSYLVANIA REGISTERED PROFESSIONAL MARK D. BOWEN ENGINEER PE-057426

NAME: MARK D. BOWEN DATE
STATE AND LICENSE NO: PA PE-057426 02/20/2018

Architectural:

SCHRADERGROUP Architecture, LLC
Address: 161 Leverington Ave, Suite 105, Philadelphia, PA 19127
Phone: 215.482.7440
Fax: 215.482.7441
Email: Canspach@sgarc.com
Attn: Courtney Anspach

Structural:

SCHRADERGROUP Architecture, LLC
Address: 153 East King Street, Suite 211-212, Lancaster, PA 17602
Phone: 717.299.8965
Fax:
Email: tforsberg@sgarc.com
Attn: Tom Forsberg

Civil:

Renew Design Group
Address: 117 East Broad Street, Suite 4, Souderton, PA 18964
Phone: 484.443.4433
Fax: 484.443.4430
Email: kenbissinger@renewdesigngroup.com
Attn: Ken Bissinger

MEP:

Global Engineering Solutions
Address: 6700 Rockledge Drive, #301, Bethesda, MD 20817
Phone: 301.216.2871
Fax: 301.216.9671
Email: vassilis@theges.com
Attn: Vassilis Skardis

Security/IT:

Educational Systems Planning
Address: 49 Old Solomons Island Road, Annapolis, MD 21401
Phone: 410.573.9148
Fax:
Email: bjones@educationalsystemsplanning.com
Attn: Bryan Jones

BID DOCUMENTS
FEBRUARY 16, 2018

Revision Schedule		
NO.	DESCRIPTION	DATE
2	Addendum #2	03-22-2018

SCHOOL & LOCATION

Motivation High School

5900 Baltimore Avenue Philadelphia, PA 19143

PROJECT TITLE

Renovations to Motivation High School

DRAWING TITLE

GRADING, DRAINAGE & UTILITY NOTES & DETAILS

AS NOTED

LOCATION NO.	FILE NO.
17-015	
DRAWN BY	CHECKED BY
RDG	*RDG*

B-014C OF *2017/18*
B-017C OF *2017/18*
B-015C OF *2017/18*
B-016C OF *2017/18*

DRAWING NO.

C4.2

A B C D E F

STRUCTURE	GRATE
2499CGP	24" PEDESTRIAN GRATE
2499CGC	24" SOLID COVER

2

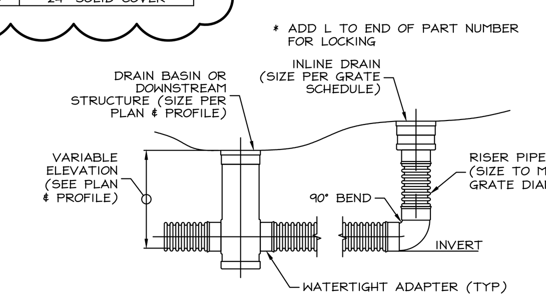

TYPICAL INSTALLATION

NOTES:

1. INLINE AND DRAIN BASIN TO BE NYLOPLAST OR APPROVED EQUAL. CONTACT INFO: NYLOPLAST-ADS 3130 VERONA AVENUE BUFORD, GEORGIA 30518 www.ADS-PIPE.com (866) 888-8479
2. INSTALL PER MANUFACTUR'S SPECS AND DIRECTIONS.

GRATE SCHEDULE

BASIN NO.	TOP OF GRATE (FT)	INVERT (FT)	SUMP (FT)
1	72.0	68.1	67.8
2	71.9	68.0	67.7
3	72.2	68.2	67.9
4	72.0	68.1	67.8
5	71.8	67.9	67.6
6	72.3	68.4	68.1
7	72.0	68.1	67.8

2

SOLID LID SCHEDULE

JUNCTION BOX NO.	TOP OF LID (FT)	INVERT (FT)	SUMP (FT)
1	72.0	68.3	68.0
2	72.3	67.1	66.8
3	72.2	67.0	66.7
4	72.2	67.0	66.7

NYLOPLAST-ADS PVC STRUCTURE

C-23 SQUARE DRAIN STRUCTURE

NOT TO SCALE

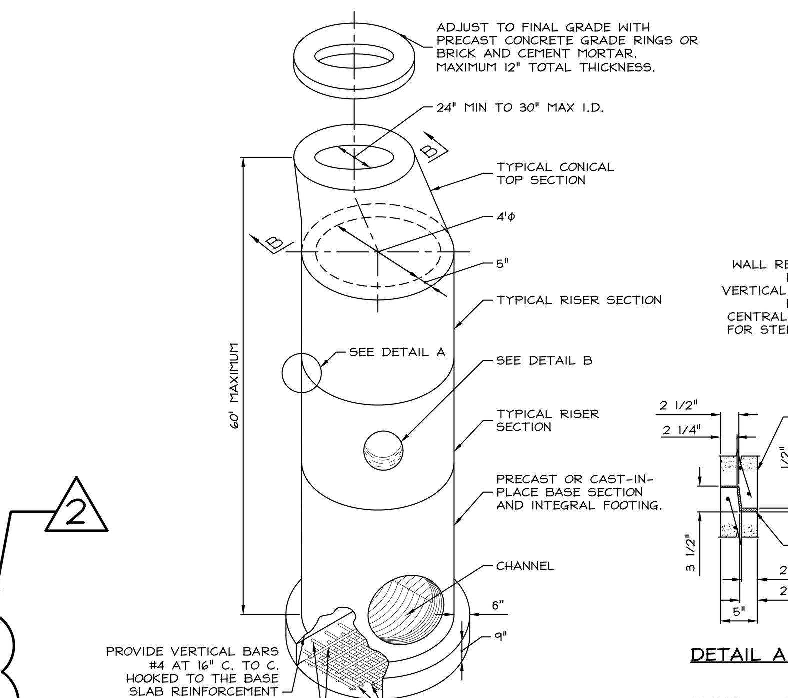

MANHOLE

FOR PIPES 30" INSIDE DIAMETER AND LESS *SEE TABLE B FOR BASE SLAB STEEL REQUIREMENTS. PROVIDE WALL REINFORCEMENT DETAILS AT BASE SLAB TYPICAL OF CAST-IN-PLACE MANHOLE.

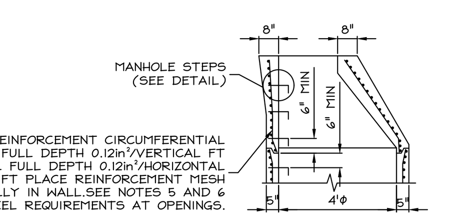

SECTION B-B

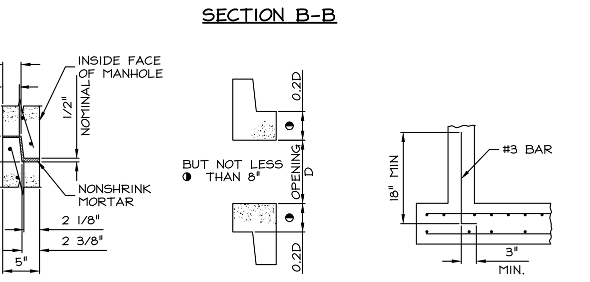

DETAIL A DETAIL B DETAIL C

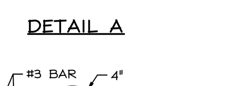

ALTERNATE OPENING REINFORCEMENT

SEE NOTE 11

TABLE B		
PRECAST MANHOLE HEIGHT	TOP STEEL REQUIREMENTS	BOTTOM STEEL REQUIREMENTS
0'-0" TO 30'-0"	NO. 4 BARS AT 6" C. TO C. OR 0.33 IN²/FT WWF 6" MAXIMUM SPACING	NO. 4 BARS AT 12" C. TO C. OR 0.16 IN²/FT WWF 6" MAXIMUM SPACING
> 30'-0" TO 60'-0"	NO. 5 BARS AT 6" C. TO C. OR 0.56 IN²/FT WWF 6" MAXIMUM SPACING	NO. 4 BARS AT 6" C. TO C. OR 0.27 IN²/FT WWF 6" MAXIMUM SPACING

NOTES:

1. PRECAST MANHOLES MEETING THE REQUIREMENTS OF PUBLICATION 408, SECTION 714, MAY BE SUBSTITUTED FOR THE STANDARD CAST-IN-PLACE MANHOLE. FOR DEVIATION OR MODIFICATION OF THE STANDARDS, SUBMIT SHOP DRAWINGS FOR APPROVAL.
2. FOR RISERS OR BASE SECTIONS WITH OPENINGS, PROVIDE A MINIMUM HEIGHT OF SECTION SO AS TO PROVIDE AN UNCUT WALL EQUAL TO 20% OF THE OPENING, BUT NO LESS THAN 8", BETWEEN THE OPENING AND THE CLOSEST JOINT BETWEEN RISERS - SEE DETAIL B.
3. FOR PRECAST RISER OR BASE SECTIONS WITH ONE OPENING LOCATED AT DEPTHS TO 60', PROVIDE CIRCUMFERENTIAL REINFORCEMENT IN ACCORDANCE WITH SECTION B-B. FOR SECTIONS WITH TWO OR MORE OPENINGS, LOCATED AT DEPTH OF 10' AND LESS, PROVIDE CIRCUMFERENTIAL REINFORCEMENT EQUAL TO 0.16 IN²/VERTICAL FT. FOR THE HEIGHT OF RISER OR BASE SECTION.
4. FOR RISERS OR BASE SECTIONS WITH TWO OR MORE OPENINGS, LOCATED AT A DEPTH GREATER THAN 10', BUT LESS THAN OR EQUAL TO 25', PROVIDE CIRCUMFERENTIAL REINFORCEMENT EQUAL TO 0.44 IN²/VERTICAL FT. FOR THE HEIGHT OF THE RISER OR BASE SECTION.
5. FOR RISERS OR BASE SECTIONS WITH TWO OR MORE OPENINGS, LOCATED AT DEPTHS GREATER THAN 25', USE A 10" THICK WALL RISER OR BASE SECTION WITH CIRCUMFERENTIAL REINFORCEMENT EQUAL TO 0.22 IN²/VERTICAL FT. EACH FACE.
6. MARK RISERS OR BASE SECTIONS WITH HOLES CLEARLY WITH MAXIMUM ALLOWABLE DEPTH.
7. PROVIDE ADDITIONAL REINFORCEMENT BARS AROUND OPENINGS AS SHOWN ON REINFORCEMENT DETAILS AT OPENINGS.
8. PROVIDE MANHOLE STEPS MEETING THE REQUIREMENTS OF PUBLICATION 408, SECTION 605.2(c). ALTERNATE CONFIGURATIONS AND DIMENSIONS, AS APPROVED BY THE ENGINEER, MAY BE USED.
9. PROVIDE MINIMUM 1" SECTION DIMENSION FOR METAL STEPS. PROVIDE MINIMUM 3/4" SECTION DIMENSION FOR NON-DETERIORATING MATERIAL STEPS.
10. MECHANICAL ANCHOR REQUIRED FOR INSTALLATION OF STEPS WITHOUT HOOKS.
11. THE ALTERNATE OPENING REINFORCEMENT DETAIL IS NOT DESIRABLE BY DESIGN. USE IT TO MEET EXISTING PIPE ELEVATIONS.

C-27 MANHOLE - PRECAST SEE DOGHOUSE DETAIL C-31 FOR BOTTOM CONNECTION

NOT TO SCALE

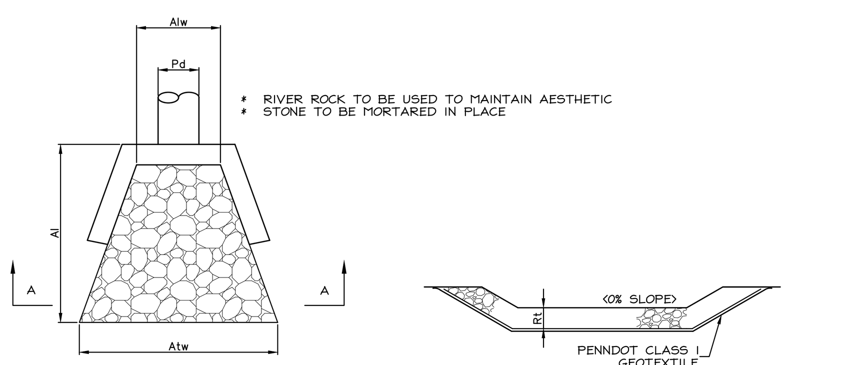

* RIVER ROCK TO BE USED TO MAINTAIN AESTHETIC
* STONE TO BE MORTARED IN PLACE

PLAN SECTION A-A

OUTLET NUMBER	PIPE DIAMETER Pd (IN.)	RIPRAP		APRON		
		SIZE (R-_)	THICK. Rt (IN.)	LENGTH Al (FT.)	INITIAL WIDTH Aiw (FT.)	TERMINAL WIDTH Atw (FT.)
1	15	3	9	12	3.75	8.55

C-28 RIPRAP APRONS AT PIPE OUTLETS WITH ENDWALL

NOT TO SCALE

* REFER TO PENNDOT PUBLICATION 408 AND RC-31M, LATEST REVISION.

HEADWALL/ENDWALL TYPE D-W

* REFER TO PENNDOT PUBLICATION 408 AND RC-39M, LATEST REVISION.

2

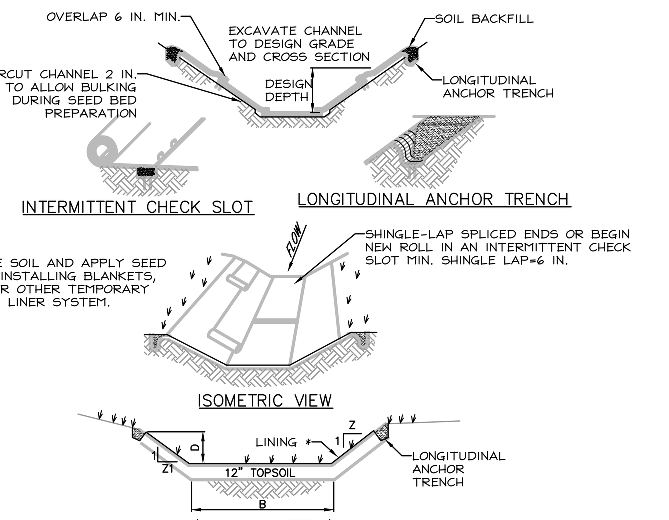

* 100% BIODEGRADABLE EROSION CONTROL MATTING.
* OVER EXCAVATE 1' AND ADD MEDIA FILTER SOIL MIX.

SEE MANUFACTURER'S LINING INSTALLATION DETAIL FOR STAPLE PATTERNS, VEGETATIVE STABILIZATION FOR SOIL AMENDMENTS, SEED MIXTURES AND MULCHING INFORMATION

CHANNEL NO.	BOTTOM WIDTH B (FT)	DEPTH D (FT)	TOP WIDTH W (FT)	Z1 (FT)	Z2 (FT)	LINING *
1	5	1	25	10	10	TRM

NOTES:

ANCHOR TRENCHES SHALL BE INSTALLED AT BEGINNING AND END OF CHANNEL IN THE SAME MANNER AS LONGITUDINAL ANCHOR TRENCHES.

CHANNEL DIMENSIONS SHALL BE CONSTANTLY MAINTAINED. CHANNEL SHALL BE CLEANED WHENEVER TOTAL CHANNEL DEPTH IS REDUCED BY 25% AT ANY LOCATION. SEDIMENT DEPOSITS SHALL BE REMOVED WITHIN 24 HOURS OF DISCOVERY OR AS SOON AS SOIL CONDITIONS PERMIT ACCESS TO CHANNEL WITHOUT FURTHER DAMAGE. DAMAGED LINING SHALL BE REPAIRED OR REPLACED WITHIN 48 HOURS OF DISCOVERY.

NO MORE THAN ONE THIRD OF THE SHOOT (GRASS LEAF) SHALL BE REMOVED IN ANY MOWING. GRASS HEIGHT SHALL BE MAINTAINED BETWEEN 2 AND 3 INCHES UNLESS OTHERWISE SPECIFIED. EXCESS VEGETATION SHALL BE REMOVED FROM PERMANENT CHANNELS TO ENSURE SUFFICIENT CHANNEL CAPACITY.

C-29 BIOSWALE (VEGETATED CHANNEL)

NOT TO SCALE

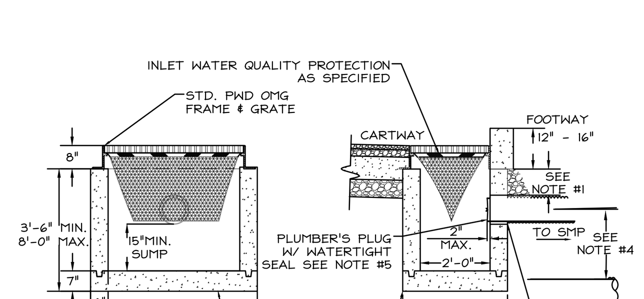

NOTES:
1. LOCATE PIPE OPENINGS TO PROVIDE MIN. 4" OF CONCRETE BETWEEN TOP OF INLET BOX AND TOP OF PIPE OPENING. (PENNDOT RC-46M). CURB ABOVE INLET SHALL BE SUPPORTED WITH 2A STONE BETWEEN TOP OF PIPE AND BOTTOM OF CURB. CURB OUTSIDE OF INLET SHALL BE STANDARD DEPTH.
2. HEIGHT OF PENNDOT INLET BOX SHALL BE 3.5' MIN. AND 8.0' MAX.
3. FOOTWAY AND CARTWAY RESTORATION HAS BEEN DRAWN FOR REFERENCE PURPOSES ONLY. PAVEMENT RESTORATION QUANTITIES AND DESIGN MUST CONFORM TO CURRENT PHILADELPHIA STREETS DEPARTMENT STANDARDS FOR CITY STREETS AND PENNDOT STANDARDS FOR STATE ROUTES.
4. MIN. COVER FOR THERMOPLASTIC PIPE IN ROW MUST BE 2'.
5. PLUMBERS PLUG TO MAINTAIN WATERTIGHT SEAL UNTIL CONSTRUCTION IS COMPLETE. PLUG TO BE REMOVED AT DIRECTION OF GSI MAINTENANCE. PLUG NOT TO EXTEND MORE THAN 2" OUT FROM INLET WALL.

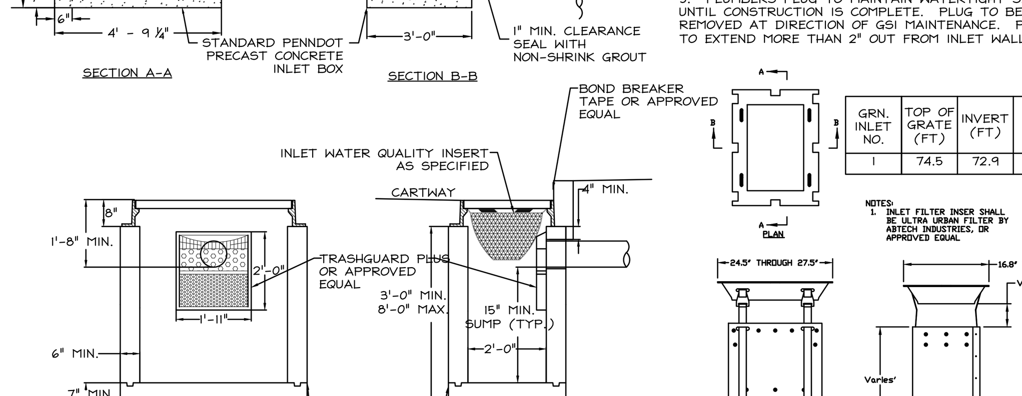

GRN. INLET NO.	TOP OF GRATE (FT)	INVERT (FT)	SUMP (FT)
1	74.5	72.9	71.4

NOTES:
1. INLET FILTER INSER SHALL BE ULTRA URBAN FILTER BY ABTECH INDUSTRIES, OR APPROVED EQUAL

C-24 GREEN INLET WITH PROTECTION

NOT TO SCALE

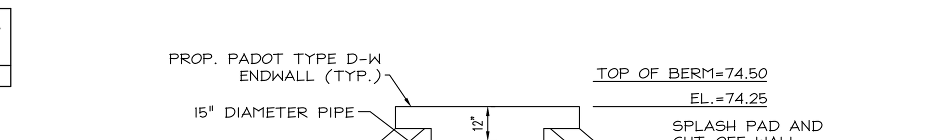

NOTE: ALL ENDWALLS SHALL BE EQUIPPED WITH SAFETY GRATE

C-34 HEADWALL DETAIL

NOT TO SCALE

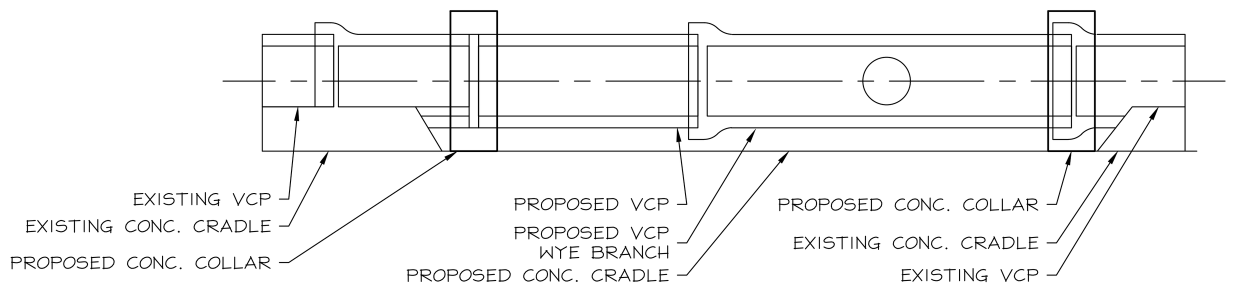

SECTION A-A

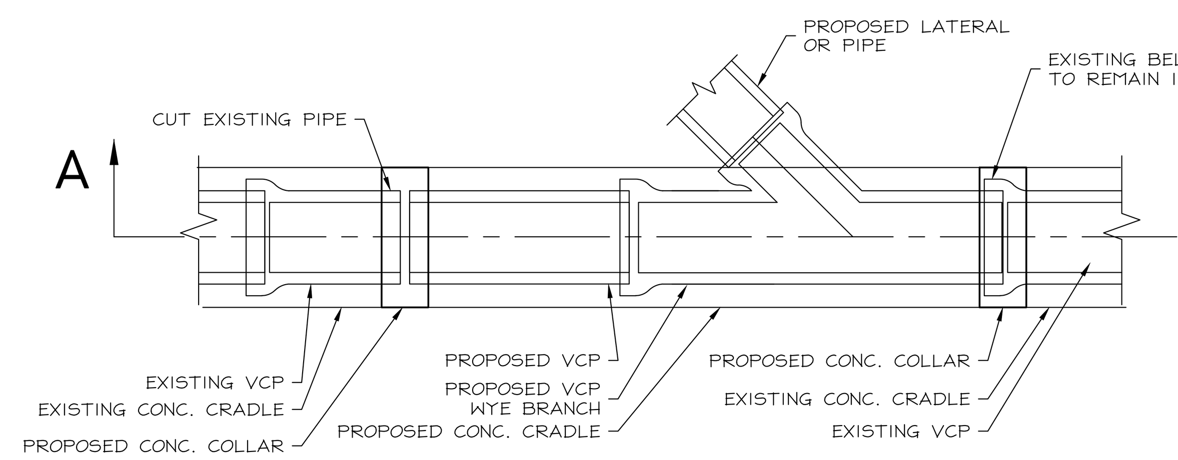

PLAN

C-32 VCP WYE BRANCH DETAIL

NOT TO SCALE

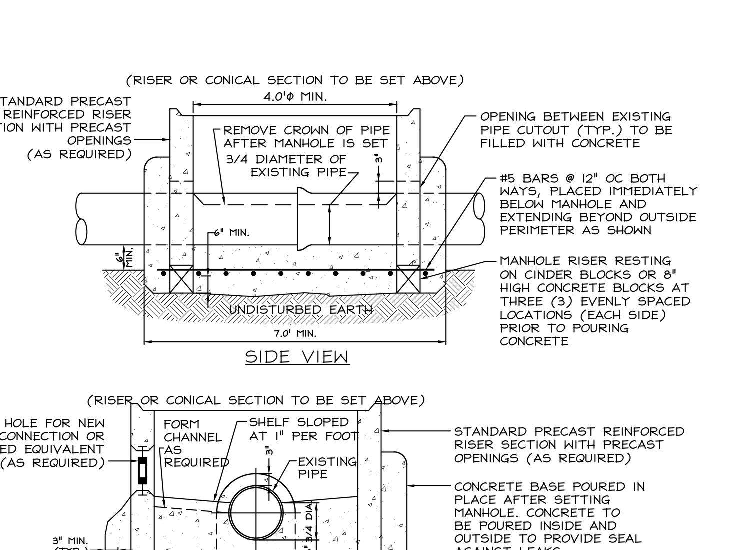

NOTES:
1.) EXISTING PIPE TO REMAIN UNTIL EXFILTRATION OR VACUUM TEST ON MANHOLE IS ACCEPTABLE TO AUTHORITY.

2.) REMOVE CROWN OF EXISTING PIPE FLUSH WITH CONCRETE SHELF.

C-31 DOGHOUSE MANHOLE DETAIL

NOT TO SCALE

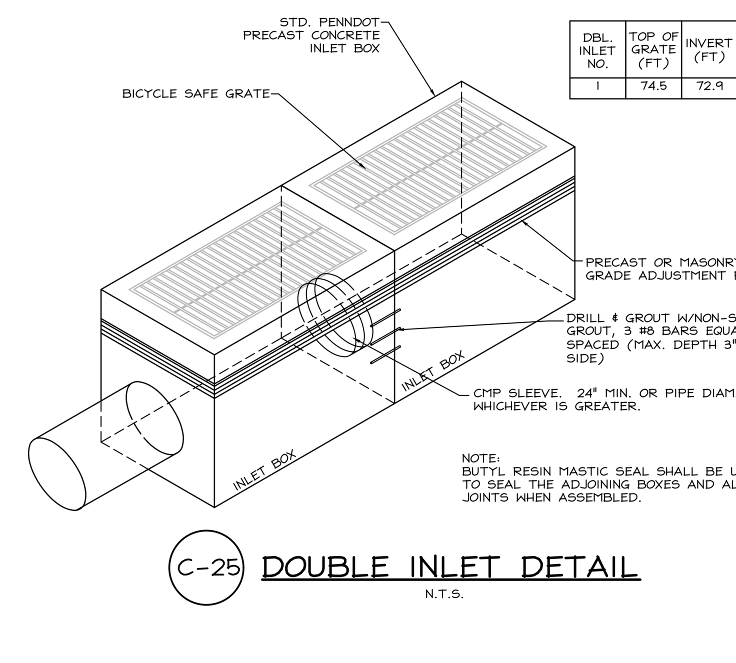

DBL. INLET NO.	TOP OF GRATE (FT)	INVERT (FT)	SUMP (FT)
1	74.5	72.9	71.4

NOTE:
BUTYL RESIN MASTIC SEAL SHALL BE USED TO SEAL THE ADJOINING BOXES AND ALL JOINTS WHEN ASSEMBLED.

C-25 DOUBLE INLET DETAIL

N.T.S.

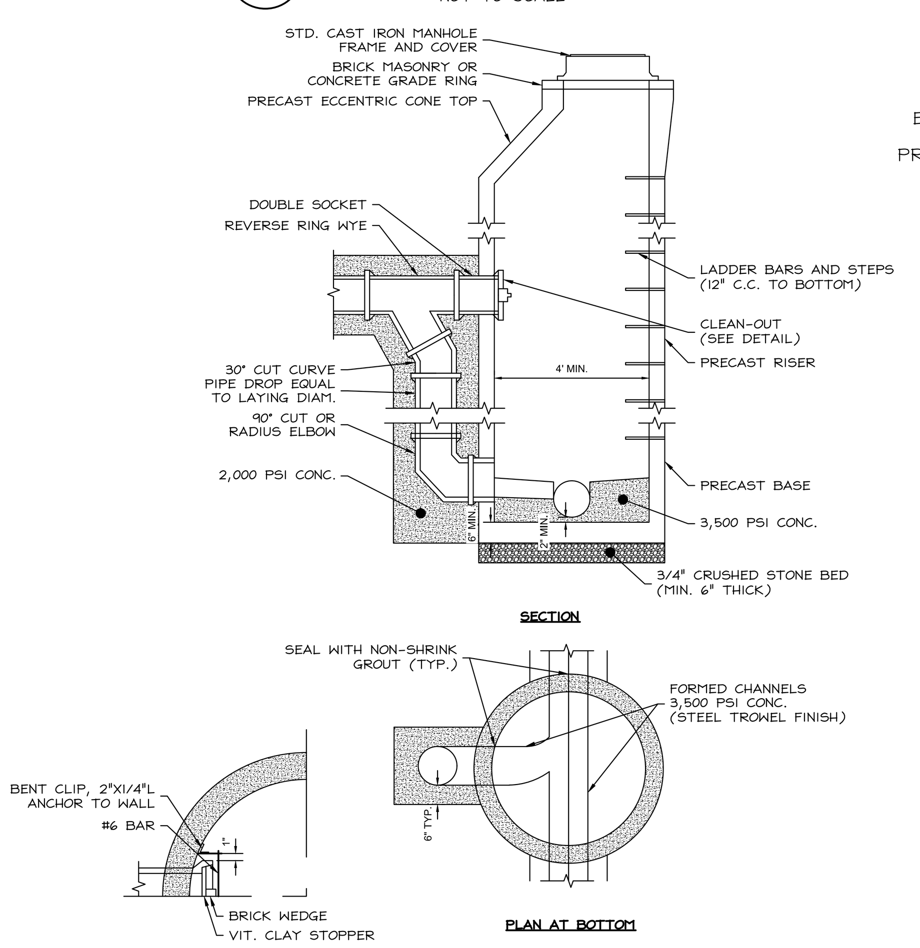

C-35 PRECAST CONCRETE DROP MANHOLE (SEE C-27 & C-31)

NOT TO SCALE

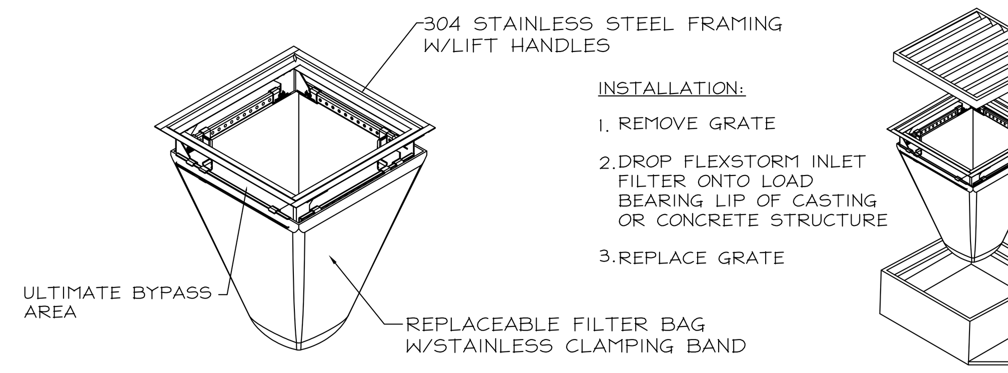

INSTALLATION:

1. REMOVE GRATE
2. DROP FLEXSTORM INLET FILTER ONTO LOAD BEARING LIP OF CASTING OR CONCRETE STRUCTURE
3. REPLACE GRATE

FLEXSTORM PURE INLET FILTERS FOR RECTANGULAR OPENINGS WITH GRATES

Product selection for FLEXSTORM PURE Filters (Permanent Inlet Protection)

Descrip	Inlet Type	Grate Size	Opening Size	Bag Cap (ft³)	Flow Ratings (CFS) FX/FX+	PC/PC+	Bypass	FX	FX+	PC	PC+
2' x 2' Frame and Grate	Square/Rect (SQ)	24 x 24	22 x 22	3.3	1.8	1.6	4.8	62MHD22FX	62MHD22FXP	62MHD22PC	62MHD22PCP
2' x 4' Penndot Type M & C	Square/Rect (SQ)	26.5 x 48	24 x 44.5	6.3	3.1	2.2	9.5	62PENNMHDFX	62PENNMHDFXP	62PENNMHDPC	62PENNMHDPCP
2' x 6' Frame and Grate	Concrete Box (HD4)	26.5 x 75	24 x 72	10.0	4.8	4.1	13.0	62PENNHD2x6FX	62PENNHD2x6FXP	62PENNHD2x6PC	62PENNHF2x6PCP
3 x 3 Frame and Grate	Square/Rect (SQ)	37.5 x 37.5	36 x 36	7.2	4.4	3.2	9.6	62HDXLFX	62HDXLFXP	62HDXLPC	62HDXLPCP
48" Open Throat Curb Inlet	Wall Mount (WM)	N/A	48	3.3	2.5	4.2	N/A*	62HDWM48FX	62HDWM48FXP	62HDWM48PC	62HDWM48PCP

*FLOW RATINGS SHOWN ARE 50% MAXIMIUM

NOTES:

1. ALL FRAMING IS CONSTRUCTED OF 304 STAINLESS STEEL FOR 25 YEAR SERVICE LIFE RATING
2. TOTAL BYPASS CAPACITY WILL VARY WITH EACH SIZED DRAINAGE STRUCTURE. FLEXSTORM DESIGNS FRAMING BYPASS TO MEET OR EXCEED THE DESIGN FLOW OF THE PARTICULAR DRAINAGE STRUCTURE.
3. UPON ORDERING ADS P/N CONFIRMATION OF THE DOT CALLOUT, FLEXSTORM ITEM CODE, CASTING MAKE AND MODEL, OR DETAILED DIMENSIONAL FORMS MUST BE PROVIDED.
4. FOR WRITTEN SPECIFICATIONS AND MAINTENANCE GUIDELINES VISIT WWW.INLETFILTERS.COM

C-26 GREEN INLET FILTER

NOT TO SCALE

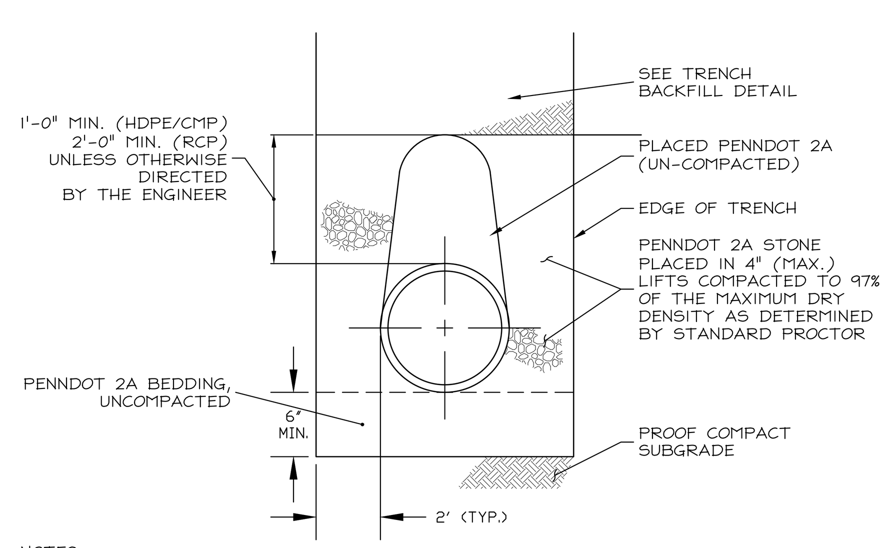

NOTES:

1. IF TRENCH IS EXTREMELY WET DUE TO HIGH GROUNDWATER, USE AASHTO #57 STONE UP TO THE HAUNCHES OF THE PIPE. REMAINDER OF BEDDING TO BE PENNDOT 2A.
2. FOLLOW 'PIPE INSTALLATION PROCEDURES' PER PENNDOT PUBLICATION 72M - RC-30M.

C-30 PIPE BEDDING - STORM SEWER

NOT TO SCALE

PIPE SPECIFICATIONS

1. UNDERDRAIN PIPE SHALL BE HDPE TYPE S SMOOTH INTERIOR CONTINUOUSLY PERFORATED (AASHTO M252, AASHTO M294).
2. CONCRETE PIPE SHALL BE CLASS 4 REINFORCED CONCRETE PIPE AND SHALL CONFORM TO PHILADELPHIA WATER AND SEWER DESIGN STANDARDS AND ASTM C 14, ASTM C 76, CSA A 257.2.
3. DUCTILE IRON PIPE SHALL BE CLASS 50 BELL JOINT BITUMINOUS COATED AWWA C 151.
4. PERFORATED PVC SHALL BE SCHEDULE 40 MANUFACTURED FROM PVC COMPOUND WITH A CELL CLASS OF 12454 PER ASTM D 1784 AND CONFORM WITH NSF INTERNATIONAL STANDARD 14. PIPE SHALL BE IRON PIPE SIZE (IPS) CONFORMING TO ASTM D 1785 AND ASTM D 2665.
5. ALL CONNECTIONS TO STRUCTURES SHALL BE GROUTED WITH NON-SRINK GROUTING.
6. ALL FITTINGS AND CONNECTIONS SHALL BE PER MANUFACTURES RECOMMENDATIONS AND OF THE SAME MATERIAL AS THE PIPE.

THE SCHOOL DISTRICT OF PHILADELPHIA

OFFICE OF CAPITAL PROGRAMS

440 NORTH BROAD STREET
PHILADELPHIA, PA 19130 - 4015

(215) 400 - 4730 | (215) 400 - 4731 (fax)
www.philasd.org

SEAL:

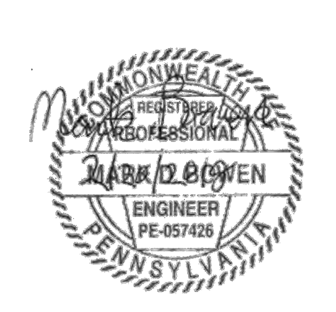

NAME: MARK D. BOWEN DATE
STATE AND LICENSE NO: PA PE-057426 02/20/2018

Architectural:

SCHRADERGROUP Architecture, LLC
Address: 161 Leverington Ave, Suite 105, Philadelphia, PA 19127
Phone: 215.482.7440
Fax: 215.482.7441
Email: Canspach@sgarc.com
Attn: Courtney Anspach

Structural:

SCHRADERGROUP Architecture, LLC
Address: 153 East King Street, Suite 211-212, Lancaster, PA 17602
Phone: 717.299.8965
Fax:
Email: tforsberg@sgarc.com
Attn: Tom Forsberg

Civil:

Renew Design Group
Address: 117 East Broad Street, Suite 4, Souderton, PA 18964
Phone: 484.443.4433
Fax: 484.443.4430
Email: kenbissinger@renewdesigngroup.com
Attn: Ken Bissinger

MEP:

Global Engineering Solutions
Address: 6700 Rockledge Drive, #301, Bethesda, MD 20817
Phone: 301.216.2871
Fax: 301.216.9671
Email: vassilis@theges.com
Attn: Vassilis Skardis

Security/IT:

Educational Systems Planning
Address: 49 Old Solomons Island Road, Annapolis, MD 21401
Phone: 410.573.9148
Fax:
Email: bjones@educationalsystemsplanning.com
Attn: Bryan Jones

BID DOCUMENTS
FEBRUARY 16, 2018

Revision Schedule

NO.	DESCRIPTION	DATE
2	Addendum #2	03-22-2018

SCHOOL & LOCATION

Motivation High School

5900 Baltimore Avenue Philadelphia, PA 19143

PROJECT TITLE

Renovations to Motivation High School

DRAWING TITLE

GRADING, DRAINAGE & UTILITY NOTES & DETAILS CON'T

AS NOTED

LOCATION NO.	FILE NO.
17-015	
DRAWN BY *RDG*	CHECKED BY *RDG*

B-014C OF *2017/18*
B-017C OF *2017/18*
B-015C OF *2017/18*
B-016C OF *2017/18*

DRAWING NO.

C4.3

2

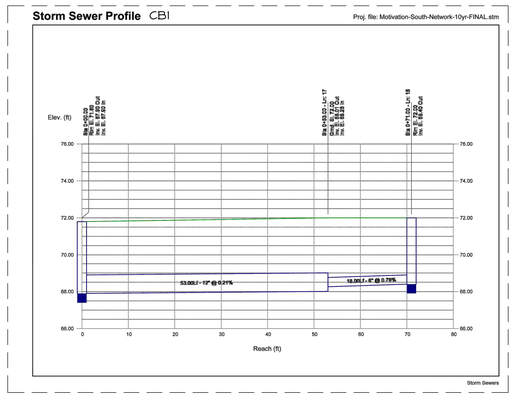

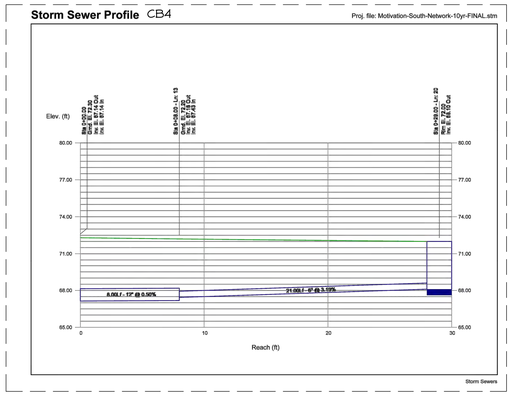

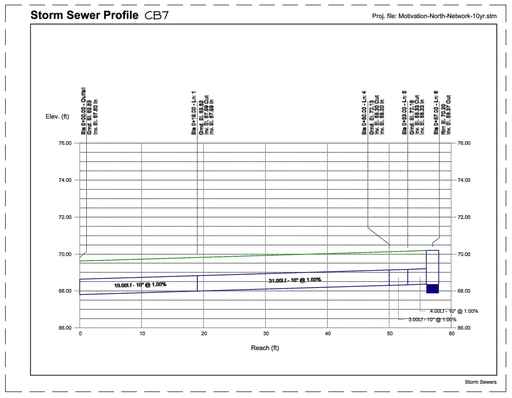

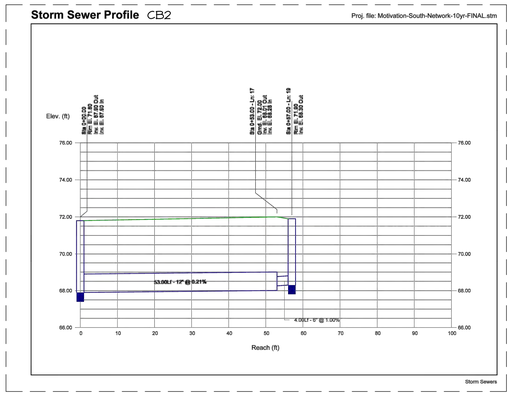

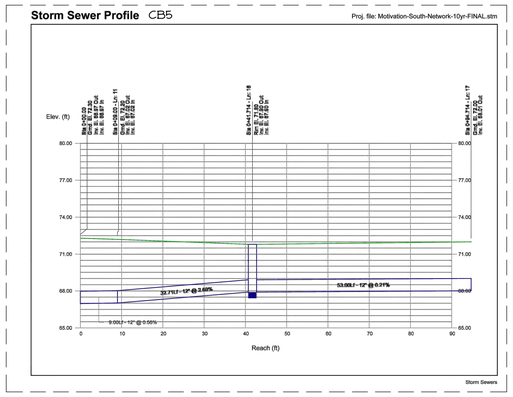

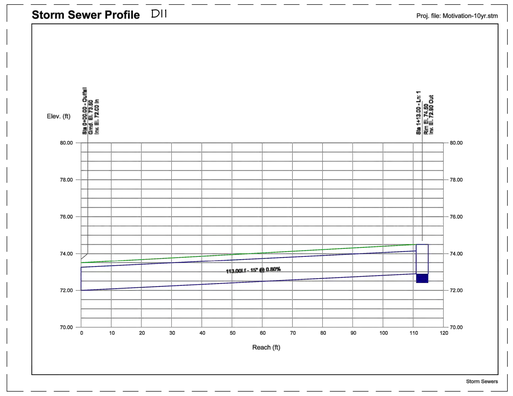

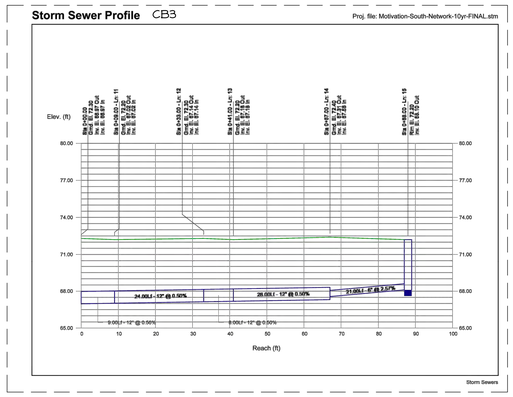

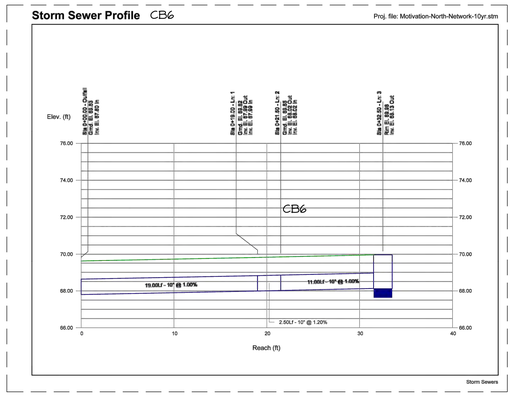

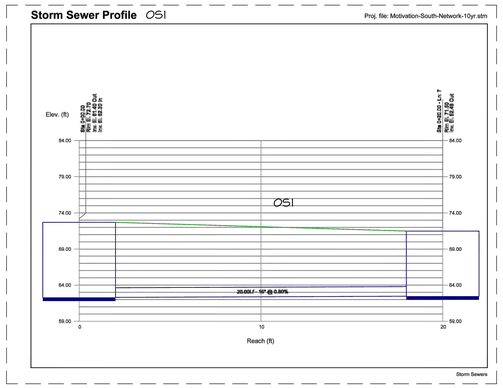

THE SCHOOL DISTRICT OF PHILADELPHIA

OFFICE OF CAPITAL PROGRAMS

440 NORTH BROAD STREET
PHILADELPHIA, PA 19130 - 4015

(215) 400 - 4730 | (215) 400 - 4731 (fax)
www.phila.k12.pa.us

SEAL:

COMMONWEALTH OF PENNSYLVANIA
REGISTERED PROFESSIONAL
MARK D. BOWEN
ENGINEER
PE-057426

NAME: MARK D. BOWEN DATE
STATE AND LICENSE NO: PA PE-057426 02/20/2018

Architectural:

SCHRADERGROUP Architecture, LLC
Address: 161 Leverington Ave, Suite 105, Philadelphia, PA 19127
Phone: 215.482.7440
Fax: 215.482.7441
Email: Canspach@sgarc.com
Attn: Courtney Anspach

Structural:

SCHRADERGROUP Architecture, LLC
Address: 153 East King Street, Suite 211-212, Lancaster, PA 17602
Phone: 717.299.8965
Fax:
Email: tforsberg@sgarc.com
Attn: Tom Forsberg

Civil:

Renew Design Group
Address: 117 East Broad Street, Suite 4, Souderton, PA 18964
Phone: 484.443.4433
Fax: 484.443.4430
Email: kenbissinger@renewdesigngroup.com
Attn: Ken Bissinger

MEP:

Global Engineering Solutions
Address: 6700 Rockledge Drive, #301, Bethesda, MD 20817
Phone: 301.216.2871
Fax: 301.216.9671
Email: vassilis@theges.com
Attn: Vassilis Skardis

Security/IT:

Educational Systems Planning
Address: 49 Old Solomons Island Road, Annapolis, MD 21401
Phone: 410.573.9148
Fax:
Email: bjones@educationalsystemsplanning.com
Attn: Bryan Jones

BID DOCUMENTS
FEBRUARY 16, 2018

Revision Schedule

NO.	DESCRIPTION	DATE
2	Addendum #2	03-22-2018

SCHOOL & LOCATION

Motivation High School

5900 Baltimore Avenue Philadelphia, PA 19143

PROJECT TITLE

Renovations to Motivation High School

DRAWING TITLE

GRADING, DRAINAGE & UTILITY PROFILES

AS NOTED

LOCATION NO.	FILE NO.
17-015	
DRAWN BY *RDG*	CHECKED BY *RDG*

B-014C OF *2017/18*
B-017C OF *2017/18*
B-015C OF *2017/18*
B-016C OF *2017/18*

DRAWING NO.
C4.4

THE SCHOOL DISTRICT OF
PHILADELPHIA

MOTIVATION HIGH SCHOOL
MAJOR RENOVATION

Pre-Bid Walkthrough and Conference
March 12, 2018 – 1:00 PM
Motivation High School, 5900 Baltimore Ave

Attendance List

Name	Title/Company	Phone Number	Email Address
John Smith	Smith Construction	215-639-1560	John@Smithconstruction-inc.com
Mark Walush	GAP	215-673-7800	mwalush@johnmeehanandson.com
Thomas Flanagan	GAP	215-673-7800	tflanagan@johnmeehanandson.com
Jim Arasz	AP Construction	856-227-2030	jim@apconstruction.com
Kevin Kohler	John C. Kohler Co.	(215)855-7000	kevin@johnckohler.com
Brian Kohler	John C. Kohler Co.	(215) 855-7000	brian@johnckohler.com
Bob Marlin	Ernest Bock & Sons	215 677-2625	
Bruce MacDonald	Delta Bros	2159897506	bmacdonald@deltabros.com
KEN FUNK	HYDE ELECTRIC	215 843-8900	KENHYDE2@GMAIL
MARK GOSHOW	DIAMOND HUNTBACH	215-718-8166	DHC.markg@gmail.com
Joseph Mignone	Graboyes	609-744-1969	joe@graboyes.com
Glenn Kucher	Robert Michaels & Associates	610 212 6710	gkucher@robertmichaelsinc.com
MARK MYERS	LOW-RISE ELEVATOR PRESIDENT	610 446 8520	MARK@LOWRISEELEVATOR.COM
SUE GARFUNKEL	D.J. Keating Co	610 664-4550	SGARFUNKEL@DJKeating.com
Al Jacke	J. PERRS	856-228-4770	amj@JackPen.com
ED HILBERT III	TE CONSTRUCTION	215-441-8023	EDHILBERT@TECbuilds.com

THE SCHOOL DISTRICT OF
PHILADELPHIA

MOTIVATION HIGH SCHOOL
MAJOR RENOVATION

Pre-Bid Walkthrough and Conference
March 12, 2018 – 1:00 PM
Motivation High School, 5900 Baltimore Ave

Attendance List

Name	Title/Company	Phone Number	Email Address
DAVE PAUL	SURETY MECH.	215 651-0531	DAVE@SURETYMECHANICAL.com
Steve Henry	PT Mechanical	215-983-0946	shenry@ptmechanicalgroup.com
Drew Silich	GEM Mechanical	610-361-9667	Drew@gemmsi.com
Vince Rongione	MAGNUM Inc	215 957 2884	Vince@magnuminc-gc.com
THOMAS MCMONAGLE	MIKE Kobithes	215-533 3118 X102	MICHAEL@Kobithesroofing.com
Bernard Bryson	SYNERTECH INC. ENV. PM	215 852 2912	bbryson@gosynertech.com
JERRY JUNOD	SDP ADMS	215 400 6738	GFJUNOD@PHILASD.ORG
PAMELA	VERSATILE	215 385 2105	versatile@versatilecg.com
SARA NORDSTROM	SDP Design Project Mgr	215-400-5099	Snordstrom@philasd.org
DAMON GONZAGA	SDP Construction Project Mgr	215-400-5209	dagonzaga@philasd.org
FRANK RATKA	SDP Inspector		fratka@philasd.org
COURTNEY ANSPACH	SCHRADERGROUP ARCH PROJECT MGR	215.482.7440	canspach@sgarc.com
DAVID SCHRADER	SCHRADERGROUP ARCH PRINCIPAL	215.482.7440	