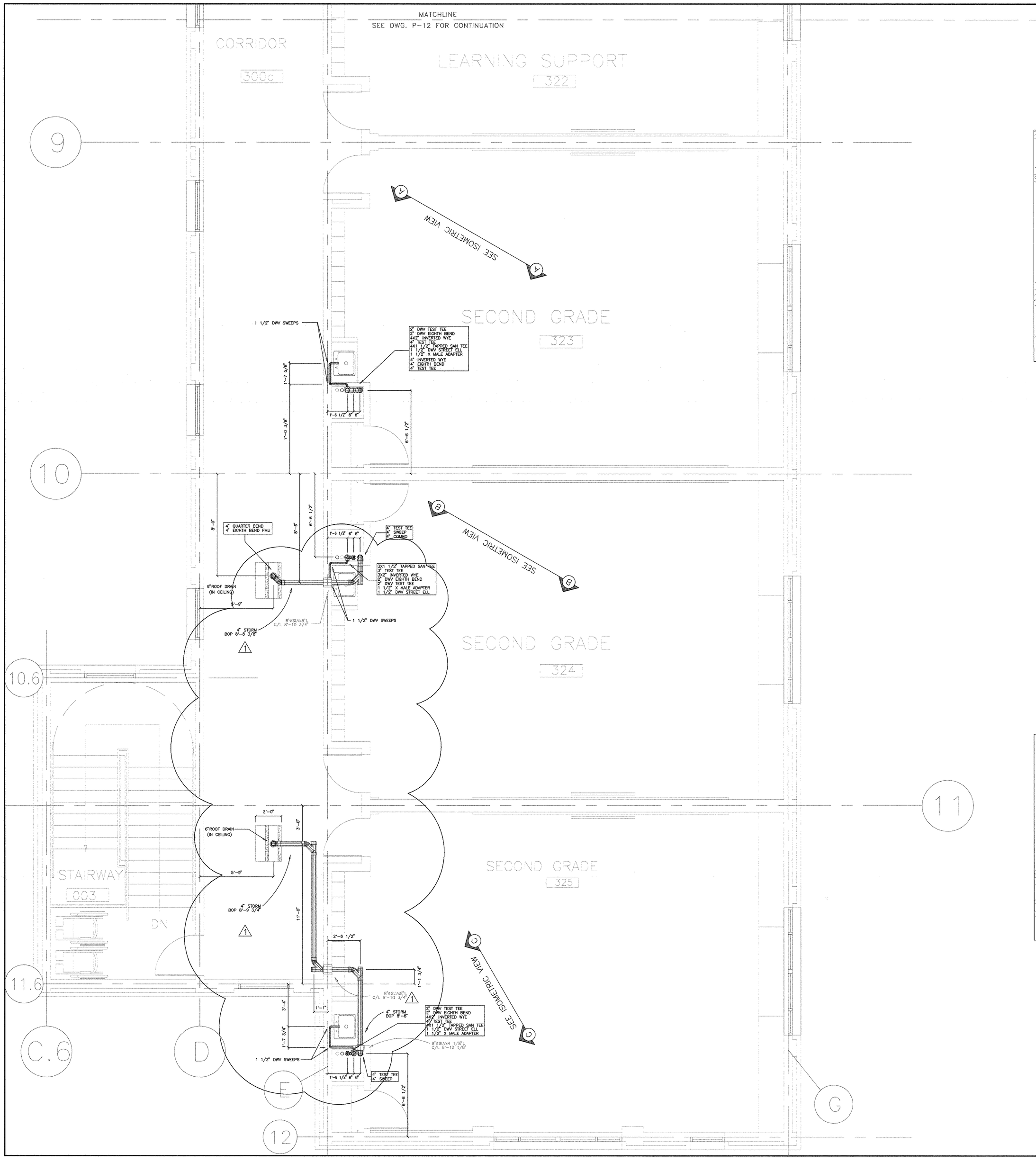

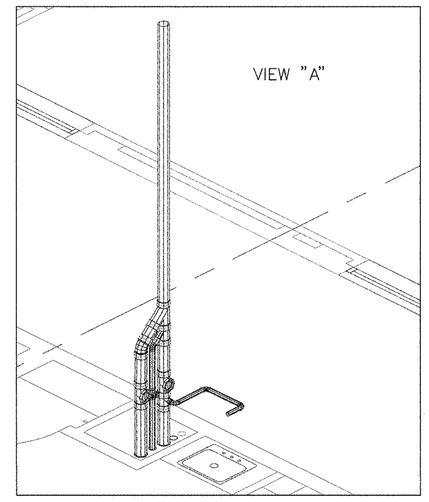

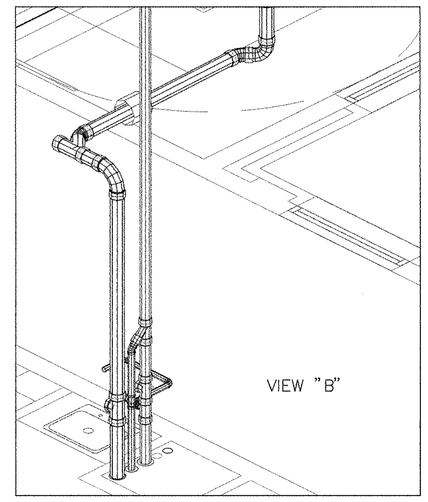

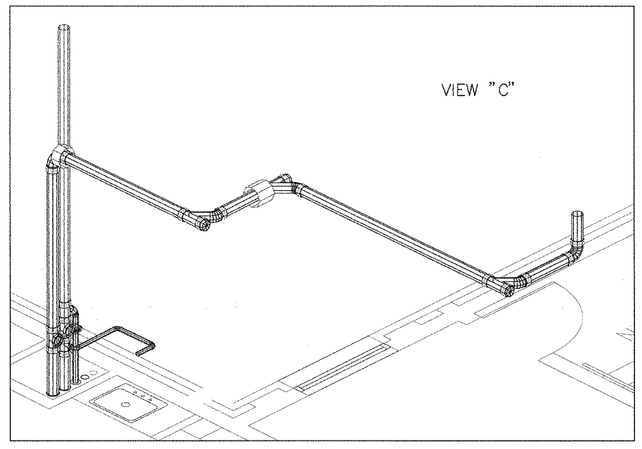

BRINJAC, KAMBIC AND ASSOCIATES, INC.
REVIEWED DATE: 5/24/96
BY: KMC

AS-BUILT
9/19/97

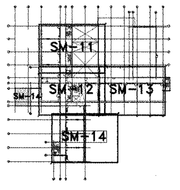

TRACEY MECHANICAL, INC.
401 CITY LINE AVE.
SUITE 212
BALA CYNWYD, PA. 19004

JOB NAME: 6TH AND DUNCANNON

TITLE: PARTIAL 3RD FLOOR SANITARY & VENTING

NO.	REVISION	DATE	BY
1	ADDED ELEVATION PER RFI RESPONCE	12-24-96	D.G.

DATE: 11/4/96
SCALE: 3/8" = 1'-0"
DRAWN: D.G.

DRAWING NO. P-14