THE SCHOOL DISTRICT OF PHILADELPHIA
Office of Capital Programs
440 North Broad Street, 3rd Floor – Suite 371
Philadelphia, PA 19130

TELEPHONE: (215) 400-4730

Addendum No. 06

Subject: Edward Gideon School
SDP Contract No. B-055C OF 2018/19

Location: Edward Gideon School
2817 West Glenwood Ave.
Philadelphia, PA 19121

This Addendum, dated January 8th, 2020 shall modify and become part of the Contract Documents for the work of this project. Any items not mentioned herein, or affected by, shall be performed strictly in accordance with the original documents.

Bid RFIs:

The following drawings have been revised and are included in this Addendum: Drawing CS1.0, ED2.0, ED4.0, E3.0, E4.1, E4.3, E5.0, E5.1, and ESP1.0; FA4.0; SC3.0.

Question #1:

Specification section 260523 Control Voltage Electrical Power Cables is listed in the table of contents, but this section has not been provided. Please provide if required for this project.

Response:

Specification section 26 0523 Control Voltage Electrical Power Cables is not required for this project and can be disregarded in the table of contents.

Question #2:

Please advise if a Gamewell/FCI Fire Alarm Control Panel/System is an acceptable alternative for Spec Section 28 4621.11 on the above mentioned project."

Response:

Yes Gamewell/FCI is acceptable.

Question #3:

MC cable is listed in the Products section of specification 260519 Low Voltage Electrical Power Conductors and Cables; however, the spec does not list where MC can be used. Please confirm MC can be used in unrestricted lengths above accessible ceilings and concealed in walls for branch circuit power wiring.

Response:

MC cable is permitted in unrestricted lengths above accessible ceilings and concealed in wall for branch circuit power wiring, as permitted by the National Electric Code.

Question #4:

For fixture types A and AE, the portion of the catalog number listed as “NXOS” does not exist. Please confirm the sensor kit catalog # provided replaces the need for “NXOS”.

Response:

Correct.

Question #5:

For fixture type X2, the color/finish is specified as “DB”. Please confirm whether the color/finish option is “DBT” (dark bronze matte textured) or “DBS” (dark bronze gloss smooth).

Response:

Dark bronze matte textured.

Question #6:

Key note 6 on dwg E4.0 is listed in the Key Note text table but is not referenced on the single line. Please clarify which feeder this keynote refers to.

Response:

Key Note #6 on dwg. E4.0 applies to the feeder between the elevator motor-generator and the elevator controller. It also applies to the feeder between the elevator controller and the elevator. Key Note #5 on dwg. E4.1 shows the location of these feeders.

Question #7:

Key notes 1 and 2 on dwg E4.1 is listed in the Key Note text table but is not referenced on the single line. Please clarify where these keynotes apply.

Response:

Keyed Notes 1 and 2 are not used on dwg. E4.1.

Question #8:

On dwg E6.0, it shows an existing MDF data rack in an existing telecom closet on the second level. This room is not shown on the second floor plan on E3.2. On the 3rd floor E3.3, there is a room labeled “MDF?” with a question mark. Please confirm this 3rd floor “MDF?” room is the existing telecom room that we are to bring all telecom drops to.

Response:

Telecom drops will be routed to IT Room #114 located on the first floor. Upon award of contract, confirm with SDP IT Dept.

Question #9:

Per dwg E4.1, it shows all CAT6 cable installed on j-hooks above the ceiling. There are not many areas where there is an accessible ceiling. Can the contractor provide EMT trunk line conduit quantities/sizes to the contractor’s preference as long as it meets fill calculation code?

Response:

EMT conduit with compression fittings is acceptable in areas without an accessible ceiling. Conduit size shall meet all code requirements and trade best practices, including conduit fill.

Question #10:

No transformer specification is provided for new transformers. Please provide specification section for transformers.

Response:

A transformer specification has been added to the project. See attachment. The specification lists manufacturers of phase change transformers. Phase change transformers are custom made and a standard written guide specification is not available from the transformer manufacturers.

Question #11:

The “F1”, “F2”, “F3”, “F4” hexagon boxes on dwg FA4.0 appear to be feeder tags for fire alarm. Where is the feeder tag schedule on the fire alarm drawings?

Response:

Tags have been removed; FA conductor quantities/requirements shall be as designated by awarded contractor’s EOR, who is fully responsible for design of FA system to be installed.

Question #12:

Spec section 282300 Electronic Surveillance CCTV has some old part numbers that are no longer manufactured by Pelco. Can SDP Security provide updated specifications with current part numbers?

Response:

Specification 282300 has been updated accordingly in the Bid documents; note that section numbers in Specification 282300 have been modified per these updates.

Question #13:

Spec section 282300 Electronic Surveillance CCTV lists a specific recording storage size in terabytes. Please confirm SDP security performed the storage recording calculations and is not necessary for the CCTV vendor to do so. If the CCTV vendor has to do calculations, there are no parameters in the specifications to size the recording storage. Please clarify design.

Response:

Calculation for required storage recording requirements shall be confirmed by the awarded contractor's vendor for the system to be installed; BOD system storage requirements have been modified accordingly in the Bid documents; note that section numbers in Specification 282300 have been modified per these updates.

Question #14:

Can SDP Security please provide full part number for basis of design CCTV cabinet in spec section 282300-2.10?

Response:

Specified requirements for equipment cabinet are minimum requirements; it is the responsibility of the awarded contractor to size, and submit for approval, proposed cabinet and model number; note that section numbers in Specification 282300 have been modified per these updates.

Question #15:

The security floor plans list some cameras with tag "A" and some cameras with tag "B" and direct us to refer to the specifications. We cannot determine what "A" and "B" mean in the specification section 282300. Can SDP Security clarify what these tags mean?

Response:

Specification 282300 has been updated accordingly in the Bid documents; note that section numbers in Specification 282300 have been modified per these updates.

Question #16:

The security drawings don't direct us to provide any conduit trunk lines in corridors for camera cat6 cables. Can SDP Security confirm that the contractor provide EMT trunk line conduit quantities/sizes to the contractor's preference as long as it meets fill calculation code?

Response:

EMT conduit with compression fittings is acceptable in areas without an accessible ceiling. Conduit size shall meet all code requirements and trade best practices, including conduit fill.

Question #17:

Where is the voice demarc indicated on the plans for the (2) voices lines required for the fire alarm control panel?

Response:

Existing demark is understood to be located in IT #114; verify in field prior to submission of bid.

Question #18:

Provide specification for fixture type D in the restroom of the Engineer's office room 5H on sheet E2.0.

Response:

Columbia MPS #MPS-2-35-MW-C-N-ED-U.

Question #19:

Please provide basis of design for 100A/4P fusible safety switch with neutral kit (type "SS3"). We do not think this is possible to build, and we would like to use an enclosed circuit breaker. Please confirm enclosed circuit breaker is acceptable.

Response:

The basis of design is a Square D #H463 4-wire Heavy Duty safety switch. A neutral is not required. Enclosed circuit breaker is acceptable.

Question #20:

A thermal magnetic breaker is specified per Generator specification 263213.13-2.7B, but spec section 2.7A states selective coordination is required. Shouldn't this breaker inside the generator be solid state electronic trip with LSI functions?

Response:

See revised 1-Line diagram drawing E4.1 for selective coordination requirements and clarifications.

Question #21:

I'd like to request another walk through for the project.

Response:

A pre-bid walk-through meeting is scheduled for January 12, 2021.

Question #22:

The Fire spec reads Notifier or approved equal. Please confirm they will accept our (Honeywell) XLS as an equal.

Response:

Honeywell XLS will be accepted as an approved equal upon receipt of FA shop drawing & equipment submittal for review.

Question #23:

In spec section 28 2300, Part 2.8 (A). it states to Provide (2) CCTV Workstations. The plans only show (1), please advise.

Response:

Quantities indicated in spec 282300 are typographical errors; design intent is to provide one (1) CCTV workstation with one (1) 19" (min.) monitor in IT Rm 114 for, with two (2) 43" (min.) remote monitors to be located in each Main Office 106 & Principal's Office 107. Per Key Note #4, verify exact locations & requirements with authorized SDP.

Question #24:

The drawings state that the panel feeders are to be installed in RGS. This corresponds to the requirements set in the specifications section 260533 3.1 B (4). Would it be acceptable for panel feeders to be installed in EMT? This is code compliant and would result is a cost savings for the School District. Typically all panel feeders have been installed in EMT on other School District projects.

Response:

RGS is required in Mechanical Rooms, Electrical Rooms, and similar areas. RGS is required where the conduit is subject to physical damage. EMT is acceptable for panel feeders where permitted by the National Electric Code, except as noted above.

Question #25:

Under specification section 011000, Summary of Work, it notes that the contractor is responsible for all environmental remediation using the services of a licensed and qualified abatement contractor. What environmental remediation is required? The documents are not specific with actual quantities and or areas requiring abatement. The specifications do state that ACM removal includes transite/ebonite electrical panels. Which existing panels contain ACM's? The specifications indicates the ACM removal is required for wire wrap insulation. Which existing feeders have ACM's? The specifications state that it is assumed that all painted surfaces throughout the building contains lead based paint. Provide a detailed scope for any paint stabilization that may be required. Please verify that the scope of work is only as indicated under .07 on page 4and 5 of the asbestos abatement, equipment demolition and lead based paint stabilization section.

Response:

By SDP.

Question #26:

Please provide drawings that show scope for the brick masonry & stone repair specification sections. Without drawings, these scopes are impossible to bid.

Response:

Specification sections #04 0120.63 and #04 0140.61 are included in the specification package to provide guidance in the event that masonry or stone instances are identified during the course of the project that require the repair cited. There is not a specific surface that is currently known to need this work.

Question #27:

In areas where existing lights are to remain, will all lighting switches and controls be existing as well?

Response:

Many existing lighting controls are identified to be removed and replaced on the design drawings in areas where existing lights are shown to remain. Existing lighting switches and controls shall be replaced where indicated on the design drawings.

Question #28:

Will all existing lights remain utilize existing wiring in place or is the wiring from light to light expected to be replaced as well?

Response:

Wiring supplying existing light fixtures shall be replaced as indicated on the design drawings, including from light to light.

Question #29:

Do the circuiting zones shown on lighting plans represent how the existing circuiting is broken up or just how existing lights are to be grouped together with the new circuiting?

Response:

Circuiting zones do not necessarily represent how the existing circuiting is configured. The zones indicate how the lights will be circuited during the project.

Question #30:

On drawings E2.0, E2.1 and E2.3 there are several Emergency Control Units shown within the same Zone. Are some new/some existing? Some are labeled and others are per Note 5. Please clarify the design intent.

Response:

All indicated Emergency Control Units are new. Emergency Lighting Control Units are required where indicated on the design drawings. Keyed Note #5 indicates the source of the “Normal” (utility) sensing circuit to be used to monitor utility power loss. Wiring diagrams are provided on drawing E5.2 to clarify the design intent.

Question #31:

On drawing E2.1 there is a note shown at the front canopy to provide a new 120v photo cell to control lights on EM1-11. It appears that circuit EM1-11 is in the Auditorium. Please clarify what this photo cell will control.

Response:

Agreed. Circuit EM1-11 is for the Auditorium lighting. The photocell will control the front canopy lighting on drawing E2.1, which is circuit EM1-24.

Question #32:

Please confirm the DAS system for the fire alarm is required per the specifications.

Response:

A DAS system is not required, & Section 284622 has been removed from the specifications accordingly.

Question #33:

The spec calls for a 24TB server and a 56TB server is required to meet SDP recording/frame rate standards. The cameras spec'd are now obsolete. I have attached the storage calculations which also reflects the current Pelco camera model equivalents.

Response:

Capacity of CCTV Server has been remedied to read 56TB; CCTV camera model numbers have been modified to indicate current BOD (Pelco) system model number equivalents.

SECTION 262213 - LOW-VOLTAGE DISTRIBUTION TRANSFORMERS

1.1 RELATED DOCUMENTS

A. Drawings and general provisions of the Contract, including General and Supplementary Conditions and Division 01 Specification Sections, apply to this Section.

1.2 SUMMARY

A. Section includes distribution, dry-type transformers with a nominal primary and secondary rating of 600 V and less, with capacities up to 1500 kVA.

1.3 ACTION SUBMITTALS

A. Product Data: For each type of product.

1. Include construction details, material descriptions, dimensions of individual components and profiles, and finishes for each type and size of transformer.
2. Include rated nameplate data, capacities, weights, dimensions, minimum clearances, installed devices and features, and performance for each type and size of transformer.

B. Shop Drawings:

1. Detail equipment assemblies and indicate dimensions, weights, loads, required clearances, method of field assembly, components, and location and size of each field connection.
2. Vibration Isolation Base Details: Detail fabrication including anchorages and attachments to structure and to supported equipment.
3. Include diagrams for power, signal, and control wiring.

1.4 INFORMATIONAL SUBMITTALS

A. Source quality-control reports.

B. Field quality-control reports.

1.5 CLOSEOUT SUBMITTALS

A. Operation and Maintenance Data: For transformers to include in emergency, operation, and maintenance manuals.

1.6 DELIVERY, STORAGE, AND HANDLING

A. Inspection: On receipt, inspect for and note any shipping damage to packaging and transformer.

1. If manufacturer packaging is removed for inspection, and transformer will be stored after inspection, re-package transformer using original or new packaging materials that provide protection equivalent to manufacturer's packaging.

B. Storage: Store in a warm, dry, and temperature-stable location in original shipping packaging.

C. Temporary Heating: Apply temporary heat according to manufacturer's written instructions within the enclosure of each ventilated-type unit, throughout periods during which equipment is not energized and when transformer is not in a space that is continuously under normal control of temperature and humidity.

D. Handling: Follow manufacturer's instructions for lifting and transporting transformers.

PART 2 - PRODUCTS

2.1 MANUFACTURERS

A. Hammond Power Solutions

B. MGM Transformer Company

C. Power Magnetics Inc.

D. Approved Equal.

2.2 GENERAL TRANSFORMER REQUIREMENTS

A. Description: Factory-assembled and -tested, air-cooled units for 60-Hz service.

B. Comply with NFPA 70.

1. Electrical Components, Devices, and Accessories: Listed and labeled as defined in NFPA 70, by a qualified testing agency, and marked for intended location and use.

C. Transformers Rated 15 kVA and Larger:

1. Comply with 10 CFR 431 (DOE 2016) efficiency levels.
2. Marked as compliant with DOE 2016 efficiency levels by an NRTL.

2.3 DISTRIBUTION TRANSFORMERS

A. Comply with NFPA 70.

B. Cores: Electrical grade, non-aging silicon steel with high permeability and low hysteresis losses.

1. One leg per phase.

2. Core volume shall allow efficient transformer operation at 10 percent above the nominal tap voltage.
3. Grounded to enclosure.

C. Coils: Continuous windings except for taps.

1. Coil Material: Aluminum or Copper
2. Internal Coil Connections: Brazed or pressure type.

D. Enclosure: Ventilated.

1. NEMA 250, Type 2: Core and coil shall be encapsulated within resin compound to seal out moisture and air.
2. KVA Ratings: Based on convection cooling only and not relying on auxiliary fans.
3. Wiring Compartment: Sized for conduit entry and wiring installation.
4. Finish: Comply with NEMA 250.

a. Finish Color: Gray weather-resistant enamel.

E. Taps for Transformers 25 kVA and Larger: Two 2.5 percent taps above and two 2.5 percent taps below normal full capacity.

F. Insulation Class, Smaller Than 30 kVA: 180 deg C, UL-component-recognized insulation system with a maximum of 115 deg C rise above 40 deg C ambient temperature.

G. Insulation Class, 30 kVA and Larger: 220 deg C, UL-component-recognized insulation system with a maximum of 150 deg C rise above 40 deg C ambient temperature.

H. Grounding: Provide ground-bar kit or a ground bar installed on the inside of the transformer enclosure.

I. K-Factor Rating: Transformers indicated to be K-factor rated shall comply with UL 1561 requirements for nonsinusoidal load current-handling capability to the degree defined by designated K-factor.

1. Unit shall not overheat when carrying full-load current with harmonic distortion corresponding to designated K-factor, without exceeding the indicated insulation class in a 40 deg C maximum ambient and a 24-hour average ambient of 30 deg C.
2. Indicate value of K-factor on transformer nameplate.
3. Unit shall comply with requirements of DOE 2016 efficiency levels when tested according to NEMA TP 2 with a K-factor equal to one.

J. Electrostatic Shielding: Where indicated, each winding shall have an independent, single, full-width copper electrostatic shield arranged to minimize interwinding capacitance.

1. Arrange coil leads and terminal strips to minimize capacitive coupling between input and output terminals.
2. Include special terminal for grounding the shield.

K. Neutral: Rated 200 percent of full load current for K-factor-rated transformers.

L. Low-Sound-Level Requirements: Maximum sound levels when factory tested according to IEEE C57.12.91, as follows:
   1. 9.01 to 50.00 kVA: 45 dBA.
   2. 50.01 to 150.00 kVA: 50 dBA.
   3. 150.01 to 300.00 kVA: 55 dBA.
   4. 300.01 to 500.00 kVA: 60 dBA.
   5. 500.01 to 700.00: 62 dBA.
   6. 700.01 to 1000.00: 64 dBA.

2.4 IDENTIFICATION

A. Nameplates: Engraved, laminated-acrylic or melamine plastic signs for each distribution transformer, mounted with corrosion-resistant screws.

2.5 SOURCE QUALITY CONTROL

A. Test and inspect transformers according to IEEE C57.12.01 and IEEE C57.12.91.

   1. Resistance measurements of all windings at rated voltage connections and at all tap connections.
   2. Ratio tests at rated voltage connections and at all tap connections.
   3. Phase relation and polarity tests at rated voltage connections.
   4. No load losses, and excitation current and rated voltage at rated voltage connections.
   5. Impedance and load losses at rated current and rated frequency at rated voltage connections.
   6. Applied and induced tensile tests.
   7. Regulation and efficiency at rated load and voltage.
   8. Insulation-Resistance Tests:

      a. High-voltage to ground.
      b. Low-voltage to ground.
      c. High-voltage to low-voltage.

   9. Temperature tests.

PART 3 - EXECUTION

3.1 EXAMINATION

A. Examine conditions for compliance with enclosure- and ambient-temperature requirements for each transformer.

B. Verify that field measurements are as needed to maintain working clearances required by NFPA 70 and manufacturer's written instructions.

C. Examine walls, floors, roofs, and concrete bases for suitable mounting conditions where transformers will be installed.

D. Verify that ground connections are in place. Maximum ground resistance shall be 5 ohms at location of transformer.

E. Environment: Enclosures shall be rated for the environment in which they are located.

F. Proceed with installation only after unsatisfactory conditions have been corrected.

3.2 INSTALLATION

A. Install wall-mounted transformers level and plumb with wall brackets fabricated by transformer manufacturer.

1. Coordinate installation of wall-mounted and structure-hanging supports with actual transformer provided.

B. Install transformers level and plumb on a concrete base with vibration-dampening supports. Locate transformers away from corners and not parallel to adjacent wall surface.

C. Anchor floor-mounted transformers according to manufacturer's written instructions.

1. Coordinate size and location of concrete bases with actual transformer provided. Cast anchor-bolt inserts into bases. Concrete, reinforcement, and formwork requirements are specified with concrete.

D. Secure transformer to concrete base according to manufacturer's written instructions.

E. Secure covers to enclosure and tighten all bolts to manufacturer-recommended torques to reduce noise generation.

F. Remove shipping bolts, blocking, and wedges.

3.3 CONNECTIONS

A. Ground equipment according to Section 260526 "Grounding and Bonding for Electrical Systems."

B. Connect wiring according to Section 260519 "Low-Voltage Electrical Power Conductors and Cables."

C. Tighten electrical connectors and terminals according to manufacturer's published torque-tightening values. If manufacturer's torque values are not indicated, use those specified in UL 486A-486B.

D. Provide flexible connections at all conduit and conductor terminations and supports to eliminate sound and vibration transmission to the building structure.

3.4 FIELD QUALITY CONTROL

A. Perform tests and inspections.

B. Small (Up to 167-kVA Single-Phase or 500-kVA Three-Phase) Dry-Type Transformer Field Tests:

1. Visual and Mechanical Inspection.

   a. Inspect physical and mechanical condition.
   b. Inspect anchorage, alignment, and grounding.
   c. Verify that resilient mounts are free and that any shipping brackets have been removed.
   d. Verify the unit is clean.
   e. Perform specific inspections and mechanical tests recommended by manufacturer.
   f. Verify that as-left tap connections are as specified.
   g. Verify the presence of surge arresters and that their ratings are as specified.

2. Electrical Tests:

   a. Measure resistance at each winding, tap, and bolted connection.
   b. Perform insulation-resistance tests winding-to-winding and each winding-to-ground. Apply voltage according to manufacturer's published data. In the absence of manufacturer's published data, comply with NETA ATS, Table 100.5. Calculate polarization index: the value of the index shall not be less than 1.0.
   c. Perform turns-ratio tests at all tap positions. Test results shall not deviate by more than one-half percent from either the adjacent coils or the calculated ratio. If test fails, replace the transformer.
   d. Verify correct secondary voltage, phase-to-phase and phase-to-neutral, after energization and prior to loading.

C. Large (Larger Than 167-kVA Single Phase or 500-kVA Three Phase) Dry-Type Transformer Field Tests:

1. Visual and Mechanical Inspection:

   a. Inspect physical and mechanical condition.
   b. Inspect anchorage, alignment, and grounding.
   c. Verify that resilient mounts are free and that any shipping brackets have been removed.
   d. Verify the unit is clean.
   e. Perform specific inspections and mechanical tests recommended by manufacturer.
   f. Verify that as-left tap connections are as specified.
   g. Verify the presence of surge arresters and that their ratings are as specified.

2. Electrical Tests:

   a. Measure resistance at each winding, tap, and bolted connection.

b. Perform insulation-resistance tests winding-to-winding and each winding-to-ground. Apply voltage according to manufacturer's published data. In the absence of manufacturer's published data, comply with NETA ATS, Table 100.5. Calculate polarization index: the value of the index shall not be less than 1.0.
c. Perform power-factor or dissipation-factor tests on all windings.
d. Perform turns-ratio tests at all tap positions. Test results shall not deviate by more than one-half percent from either the adjacent coils or the calculated ratio. If test fails, replace the transformer.
e. Perform an excitation-current test on each phase.
f. Perform an applied voltage test on all high- and low-voltage windings to ground. See IEEE C57.12.91, Sections 10.2 and 10.9.
g. Verify correct secondary voltage, phase-to-phase and phase-to-neutral, after energization and prior to loading.

D. Remove and replace units that do not pass tests or inspections and retest as specified above.

E. Test Labeling: On completion of satisfactory testing of each unit, attach a dated and signed "Satisfactory Test" label to tested component.

3.5 ADJUSTING

A. Record transformer secondary voltage at each unit for at least 48 hours of typical occupancy period. Adjust transformer taps to provide optimum voltage conditions at secondary terminals. Optimum is defined as not exceeding nameplate voltage plus 5 percent and not being lower than nameplate voltage minus 3 percent at maximum load conditions. Submit recording and tap settings as test results.

B. Output Settings Report: Prepare a written report recording output voltages and tap settings.

3.6 CLEANING

A. Vacuum dirt and debris; do not use compressed air to assist in cleaning.

END OF SECTION 262213

SECTION 28 2300 - ELECTRONIC SURVEILLANCE (CCTV)

PART 1 - GENERAL

1.1 RELATED DOCUMENTS

A. Drawings and general provisions of the Contract, including General and Supplementary Conditions and Division 01 Specification Sections, apply to this Section.

1.2 SUMMARY

A. Refer to Specification Section "COMMON WORK RESULTS FOR ELECTRONIC SAFETY AND SECURITY" for project summary and work included information.

1.3 DEFINITIONS

A. AGC: Automatic gain control.

B. BNC: Bayonet Neill-Concelman - type of connector.

C. B/W: Black and white.

D. CAT 6: Category 6

E. CCD: Charge-coupled device.

F. CMOS: Complementary metal–oxide–semiconductor.

G. FTP: File transfer protocol.

H. IP: Internet protocol.

I. LAN: Local area network.

J. MPEG: Moving picture experts group.

K. NTSC: National Television System Committee.

L. PC: Personal computer.

M. PoE: Power over Ethernet.

N. PTZ: Pan-tilt-zoom.

O. RAID: Redundant array of independent disks.

P. TCP: Transmission control protocol - connects hosts on the Internet.

Q. UPS: Uninterruptible power supply.

R. UTP: Unshielded twisted pair.

S. WAN: Wide area network.

1.4 SUBMITTALS

A. The Contractor shall meet submittal requirements as listed under General and Supplementary Conditions, Division 28 Section "Common Work Results for Electronic Safety and Security" and as identified herein.

B. Provide a submittal schedule itemizing the required submissions for approval.

C. Equipment List: Include every piece of equipment by model number, manufacturer, serial number, location, and date of original installation.

D. Provide the complete Product Data cut sheets, with product specifications, power and control requirements for the products proposed, identifying the following:

1. IP cameras, housings, mounts.

2. CCTV Video Management System (VMS).

3. CCTV workstation/server

4. CCTV monitors.

5. Network switch, patch panels, patch cables.

6. UPS.

7. Cables.

E. Provide detail shop drawings specific to the proposed system and building layout including the following:

1. All information required under Division 28 Section "Common Work Results for Electronic Safety and Security", Article 1.13 "Submittals", including symbols, legends, notes, general information, floor plans showing the locations of all security devices, panels and equipment, network risers, conduit and cable routing, etc.

2. Functional Block Diagram: Show single-line interconnections between components for signal transmission and control. Show cable types and sizes for power (low voltage and 120 VAC), video and control.

3. CCTV camera schedule, with camera types, lens sizes, housings, views.

4. Camera mounting details.

5. Riser diagrams and wiring schematics, including cable types and quantities, for power, signal, and control wiring, and grounding.

6. Category 6 UTP PoE or PoE+ cable distance table for each proposed CCTV camera location.

7. Rack layouts.

F. Prior to project close-out, as required by this section, Division 28 Section "Common Work Results for Electronic Safety and Security" (Article 1.13 "Submittals") and General and Supplementary Conditions, provide the following:

1. Record contract drawings.

2. Final updated shop drawings.

3. Final programming configurations.

4. Final updated shop drawings.

1.5 SCOPE OF WORK

A. This Section covers the installation, control and operation of all new cameras, digital video recording, and all other appurtenances comprising the surveillance system for the project.

B. This surveillance system shall be provided with alarm inputs for interface with other systems to provide integration between those systems.

C. Disconnect and remove existing CCTV cameras, mounting hardware, cables and exposed raceways. Turn cameras and mounting hardware over to the district.

D. Disconnect and remove existing CCTV cabinet, power supplies, media converters, video recording equipment, CCTV monitors, mounting brackets, cables and exposed raceway. Turn CCTV video equipment over to the district.

E. Provide new IP CCTV cameras, lenses, housings, mounts, brackets, boxes, etc., quantities as required for a complete installation of a 100% functional system as outlined below.

F. Provide 64 channel VMS servers, quantities as show on the drawings or as noted in these specifications, including mounting hardware, patch cables and power cords. Provide new video management system (VMS) software, configuration and programming.

G. Provide CCTV workstation computers, quantities as show on the drawings or as noted in these specifications, including hardware, software, monitor, keyboard and mouse.

H. Provide CCTV flat screen monitors, quantities as show on the drawings or as noted in these specifications, including mounting hardware, video patch cables and power cords.

I. Provide UPS battery backup at all CCTV equipment racks and cabinets.

J. Provide 24 port Gigabit PoE+ ethernet switches with CAT6 and fiber optic GBIC or SFP modules, quantities as show on the drawings or as noted in these specifications, including mounting hardware, patch cables and power cords.

K. Provide CAT6 cabling, terminations and patch cables from each individual CCTV camera location homerun to the MDF. Refer to the drawings for specific information.

L. Provide fiber optic cables, modules, media converters and patch cables for CCTV camera locations which exceed the maximum distance requirements for CAT6 cable.

M. Cables shall be installed concealed except at the security equipment. Cables installed in walls shall be in conduit or other suitable raceway. Cables installed above accessible ceilings shall be installed in conduit, or flexible metallic conduit.

N. Conform to the latest School District of Philadelphia (SDP) IT standards.

O. The system shall be delivered with the most current version of compatible software, firmware and hardware and shall comply with all authorities having jurisdiction.

P. Clean and adjust all equipment, aim and focus cameras, verify the proper scenes, provide programming and configuration, provide pre-testing and final testing and provide training.

1.6 WARRANTY

A. Refer to Section 280500 for details.

PART 2 - PRODUCTS

2.1 SYSTEM REQUIREMENTS

A. Video-signal format shall support H.264 High or Main profiles or MJPEG formats. On-board storage shall be provided.

B. System shall have seamless integration of all video surveillance and control functions.

C. Camera system units shall be ruggedly built and designed for extreme adverse environments, complying with NEMA Type environmental standards. Provide all mounting hardware, fasteners and appurtenances for a complete installation.

D. Surge Protection: Protect components from voltage surges originating external to equipment housing and entering through power, communication, signal, control, or sensing leads. Include surge protection for external wiring of each conductor's entry connection to components.

E. Tamper Protection: Tamper switches on enclosures, control units, pull boxes, junction boxes, cabinets, and other system components shall initiate a tamper-alarm signal when unit is opened or partially disassembled. Control-station, control-unit alarm display shall identify tamper alarms and indicate locations.

F. Provide ground loop isolation and any corrections required by ground loop problems associated with the system.

2.2 CAMERAS, LENSES, HOUSINGS AND MOUNTS

A. Provide cameras/lenses/housings, mounting brackets, wall arms, safety chains, adapters and all appurtenances for a complete system.

B. Provide pendant mount, wall mount or ceiling-mount housing options for cameras. See drawings for additional information. Final selection of appropriate housing option for each camera location shall be made to provide for the optimum installation.

C. Provide cameras with automatic exposure balancing by camera preset based on time, event or by manual configuration, with back light compensation and electronic auto-iris.

D. The system shall have easy controls for cameras with iris and focus. The system shall have image controls to enhance the picture quality (i.e., brightness, contrast, sharpness, etc.).

E. All cameras shall be required to perform under various and variable lighting conditions. All cameras shall be Day/Night, shall provide high resolution color images and shall automatically switch to high resolution monochrome in low light conditions.

2.3 EQUIPMENT

A. Sarix Professional Environmental Dome Cameras:

MPx	Model # /Description
1 MP	IMP131-1ERS, Sarix Pro Environmental IR Dome
2 MP	IMP231-1ES, Sarix Pro Environmental Dome
2 MP	IMP231-1ERS, Sarix Pro Environmental IR Dome
3 MP	IMP331-1ES, Sarix Pro Environmental Dome
3 MP	IMP331-1ERS, Sarix Pro Environment IR Dome
5 MP	IMP531-1ES, Sarix Pro Environment Dome
5 MP	IMP531-1ERS, Sarix Pro Environment IR Dome

B. Sarix Professional Indoor Domes Cameras:

MPx	Model #/Description
1 MP	IMP131-1IRS, Sarix Pro Indoor IR Dome with Microphone
2 MP	IMP231-1IS, Sarix Pro Indoor Dome with Microphone
2 MP	IMP231-1IRS, Sarix Pro Indoor IR Dome with Microphone
3 MP	IMP331-1IS, Sarix Pro Indoor Dome with Microphone
3 MP	IMP331-1IRS, Sarix Pro Indoor IR Dome with Microphone
5 MP	IMP531-1IS, Sarix Pro Indoor Dome with Microphone
5 MP	IMP531-1IRS, Sarix Pro Indoor IR Dome with Microphone

2.4 GENERAL DESCRIPTION

A. The network camera system shall offer three simultaneous video streams with up to 5 MPx, 2592 x 1944 resolution, auto iris, and varifocal lens capabilities.

B. The network camera system shall possess the following primary characteristics:

1. H.265, H.264 Main and High profiles; and MJPEG compression
2. Up to 5 megapixels
3. Dual streaming (three independent IP video streams)
4. Day/night operation with IR cut filter
5. Effective Dynamic Range: True WDR p to 120 dB, per IEC62676
6. IEEE802.3af PoE (Indoor), IEEE802.3at (Environmental) 18 ~ 32 VAC, 12 +/-10% VDC
7. Pelco Smart Compression Technology
8. Pelco Pro Analytics Suite including Adaptive Motion, Object Counting, Motion Detection, and Camera Sabotage.
9. Multicast capable with unlimited H.264/H.265 viewers
10. Unicast capable with up to 5 simultaneous viewers
11. Local storage via Micro SDHC and SDXC card, 2 TB addressable, 128 GB or more testable
12. Audio input and output
13. Alarm input and output
14. IP64 (Indoor models), IP66/67, Type 4X (Environmental models) when installed w/ IMP3EBAP

2.5 VIDEO/CAMERA

A. Imaging Device:

Model	Imaging Device	Maximum Resolution
5 MP	1/2.8-inch	2592 x 1944 (5.0 MP)
3 MP	1/2.8-inch	2048 x 1536 (3 MP)
2 MP	1/2.8-inch	1920 x 1080 (2 MP)

1 MP	1/2.8-inch	1280 x 960 (1 MP)

B. Imager Type: CMOS

C. Electronic Shutter Range: 1/10,000 to 1 sec

D. Minimum illumination:

1. Color mode:

Model	Sensitivity
5 MP	0.26 lux (33 ms, F1.4), 0.065 lux (200 ms, F1.4)
3 MP	0.065 lux (33 ms, F1.4), 0.01625 lux (200 ms, F1.4)
2 MP	0.0169 lux (33 ms, F1.4), 0.00416 lux (200 ms, F1.4)
1 MP	0.0169 lux (33 ms. F1.4), 0.00416 lux (200 ms, F1.4)

2. Black & white mode:

Model	Sensitivity
5 MPx	0.15 lux (33 ms, F1.4), 0.0375 lux (200 ms, F1.4)
3 MPx	0.03 lux (33 ms, F1.4), 0.0075 lux (200 ms, F1.4)
2 MPx	0.01 lux (33 ms, F1.4), 0.0025 lux (200 ms, F1.4)
1 MPx	0.01 lux (33 ms. F1.4), 0.0025 lux (200 ms, F1.4)

E. Scanning: Progressive

F. Image Control Settings

1. White balance range: 2,000º to 10,000ºK
2. IR Illumination: 850 nm adaptive IR, up to 50 meters
3. Day and night settings
4. Privacy zone definition: up to 8 zones of window blanking
5. 3D noise reduction

G. Lens:

1. Built-in, varifocal
2. Focal Length: F1.4, 2.8 ~ 12 mm
3. Zoom: Remote
4. Auto Iris: DC drive lens
5. Auto Focus: Automatically focuses during runtime operation
6. Field of view:

	1 MPx	2 MPx	3 MPx	5 MPx
Diagonal	96º ~ 32º	123º ~ 40º	120º ~ 39º	124°~ 40°
Horizontal	74º ~ 26º	103º ~ 35º	90º ~ 31º	94°~ 32°
Vertical	55º ~ 20º	54º ~ 20º	66º ~ 23º	68°~ 24°

H. Video:

1. The network camera system shall support up to three simultaneous streams; the second stream and third stream are variable based on the setup of the primary stream.
2. Compression type: H.265, H.264 High or Main profiles; and MJPEG

3. Orientation modes: Corridor Mode, Mirror Mode, Flip Mode, Electronic Image Rotation 90º,
4. 180º, and 270º
5. Flicker Control: Selectable 50 Hz or 60 Hz modes
6. Available resolutions:

MPx	Width x Height	Aspect Ratio
5.0	2592 x 1944	4:3
3.7	2560 x 1440	16:9
3.2	2048 x 1536	4:3
3	2304 x 1296	16:9
2.1	1920 x 1080	16:9
1.9	1600 x 1200	4:3
1.2	1280 x 960	4:3
0.9	1280 x 720	16:9
0.5	800 x 600	4:3
0.3	640 x 480	4:3
0.2	640 x 360	16:9
0.1	320 x 240	4:3
0.1	320 x 180	16:9

1. Constant bit rate (CBR), constrained variable bit rate (CVBR) with configurable maximum value.
2. Frame rate:

MPx	Images per Second (ips)
5	60, 50, 30, 25, 20, 16.67, 15, 12.5, 10, 7.5, 5, 3, 2, 1
3	30, 25, 20, 16.67, 15, 12.5, 10, 7.5, 5, 3, 2, 1
2	30, 25, 20, 16.67, 15, 12.5, 10, 7.5, 5, 3, 2, 1
1	30, 25, 20, 16.67, 15, 12.5, 10, 7.5, 5, 3, 2, 1

3. ONVIF Profile S, Profile G, Profile Q, and Profile T conformant
4. Sarix Professional range cameras feature the Pro suite of video analytics including Motion Detection, Camera Sabotage, Audio Detection, Object Counting, Adaptive Motion, Object Removal, and Directional Motion.
5. Pelco's Smart Compression Technology lowers bandwidth and storage requirements by up to 70%. Our technology allows the user to make intelligent decisions regarding storage savings and image quality.
6. Low resolution JPEG stream for configuration of camera settings.

I. Storage and Recording

7. The network camera system control shall have onboard SD card storage.
   a. Card type: Micro SDHC and SDXC
   b. Capacity: up to 2 TB addressable, 128 GB testable
8. The local SD storage shall have the ability to be backed up to alternate media without removal of the SD card from the camera.

9. Local recording on the SD card shall commence upon loss of network connectivity, based on a pre-programmed schedule.
10. The network camera system shall record video continuously in the case of network outage.
11. Alarm recording: The network camera system shall capture selectable 1, 5, or 10 second video clips on camera sabotage, motion detection, or alarm input.
12. Video recording and storage shall support ONVIF profile G.

J. Manual Pan Tilt

13. Pan Range: 0 º ~ 370º
14. Tilt Range: -15º ~ -90º
15. Rotate Range: 0 º ~ 355º

K. Simple motion detection and camera sabotage analytics.

2.6 ADDITIONAL FEATURES

A. Alarm – The network camera system shall have one alarm/sensor inputs and a relay output for alarm or control.
   1. Input: 1, PhotoMOS™ relay (30 V, 1 A)
   2. Output: 1, PhotoMOS™ relay (30 V, 1 A)
   3. Triggers: Unsupervised mode that detects switch closures (Normally Open and Normally Closed)

B. Audio – The network camera system shall have bi-directional audio capability.
   1. Input: Line level, 3K ohm differential w/ 1Vp-p maximum signal
   2. Output: Line level, 600 ohm differential w/1Vp-p
   3. Encoding: G.711 – A-law / U-law

C. Camera Discovery – VX Toolbox

D. System Information
   1. The system settings of the network camera system shall be exportable as a separate file.
   2. The network camera system shall maintain an accessible log of system and motion-triggered events.
   3. The log shall be exportable to an Excel spreadsheet file.

2.7 NETWORK

A. Connectivity: 10/100 BASE-TX Ethernet with RJ-45 connector

B. Protocols supported
   1. Transmission Control Protocol (TCP), Internet Protocol (IP) v4 and v6, User Datagram Protocol (UDP)
   2. Configuration: Dynamic Host Configuration Protocol (DHCP)

3. Web services: Hypertext Transfer Protocol (HTTP), Secure HTTP (HTTPS)
4. Network services: Domain Name System (DNS), Network Time Protocol (NTP), Internet Control Message Protocol (ICMP), Simple Network Management Protocol (SNMP) v2c/v3, Universal Plug and Play (UPnP)
5. Media: Real-Time Transport Protocol (RTP), RTP Control Protocol (RTCP), Real-Time Streaming Protocol (RTSP)
6. Multicast: Internet Group Management Protocol (IGMP)
7. Notifications: File Transfer Protocol (FTP), Secure File Transfer Protocol (SFTP). Simple Mail Transfer Protocol (SMTP)
8. Remote Access: Secure Shell (SSH)
9. Security: Secure Sockets Layer (SSL), IEEE 802.1x (EAP-MD5, EAP-TLS, EAP-TTLS, EAP-PEAP and EAP-FAST)
10. DDNS – The network camera system shall support DDNS services offered by the Manufacturer and other publicly available service offerings.
11. Quality of Service (QoS) for Differentiated Services Code Point (DSCP)
12. Session Initiation Protocol (SIP)
13. ARP (Address Resolution Protocol)
14. Web Services Dynamic Discovery (WS-Discovery)
15. NTCIP 1205 (National Transportation Communications for Intelligent Transportation System Protocol)

C. Security

1. The network camera system shall support IP address filtering whereby users can enter a list of allowed or blocked IP addresses for viewing video and configuring camera settings
2. The network camera system shall provide three levels of user access with password protection.
3. Security Access: Password protected, HTTPS, IEEE 802.X, digest authentication, IP filtering.

D. Users

1. Unicast: Up to 5 simultaneous users depending on resolution settings (3 guaranteed streams)
2. Multicast: Unlimited users H.264/H.265

E. Software Interface: Web browser view and setup

2.8 INTEGRATION

A. The network camera system shall have a built-in web server which supports browser-based configuration.

B. The camera's web server shall allow access to camera information and all primary software functions.

C. Video Management: VideoXpert; VX Toolbox; Endura 2.0 (or later); Digital Sentry 7.3 (or later)

D. Open API: Third-party VMS through Pelco API, ONVIF Profile S, Profile G, Profile Q, and Profile T

E. Mobile Application: Pelco Mobile

F. Local Storage: Capture 1-, 5- or 10-second video clips on camera sabotage, motion detection, or alarm input; record video continuously in the case of network outage with option to overwrite; access video through FTP protocol and ONVIF Profile G

G. Camera Discovery: VX Toolbox

H. Firmware Upgrade: Web UI or VX Toolbox

I. Web Browser Support: Microsoft® Internet Explorer® 8.0, Mozilla® Firefox® 3.5, Google® Chrome™ 61.0 and later

J. Multilingual User Interface: English, French, German, Italian, Portuguese, Arabic, Russian, Spanish, Turkish, Korean, Simplified Chinese

2.9 ELECTRICAL

A. Network Port: RJ-45 connector for 10/100Base-TX

B. Power Input: IEEE802.3af PoE (Indoor), IEEE802.3at PoE+ (Environmental) 18 ~ 32 VAC, 12 ± 10% VDC

C. Maximum Power Consumption

		With IR	Without IR
1.	Indoor Dome		
a.	12 VDC	10.2 W	8.4 W
2.	24 VAC	15.6 W	12 W
3.	PoE	12 W	12 W

D. Environmental Dome

		With IR	Without IR
1.	12 VDC	19.2 W	16.8 W
2.	24 VAC	26.4 W	24 W
3.	PoE+	16.8 W	16.8 W

2.10 MECHANICAL AND ENVIRONMENTAL

A. Construction Material: Aluminum; polycarbonate bubble

B. Finish: RAL 9003

C. Impact Resistance: IK10 (20J)

D. Dimensions (D x H): 13.5 cm (5.31 in) x 12.41 cm (4.48 in)

E. Temperature:

1. Operating:

a. Environmental -40°C to 60°C (-40°F to 140°F)

b. Indoor -10°C to 55°C (14°F to 131°F)

2. Storage: -40°C to 70ºC (-40°F to 158ºF)

F. Ingress Protection: IP64 (Indoor models) & IP66/67, Type 4X (Environmental models) w/ IMP3EBAP

2.11 CERTIFICATIONS

A. CE – EN 55032 (Class A), EN 50130-4, EN 60950-1

B. FCC (Class A) – 47 CFR Part 15

C. UL and cUL Listed – UL 60950-1, CAN/CSA-C22.2 No. 60950-1-07

D. UL/IEC/EN 60950-22 (environmental models only)

E. ICES-003 (Class A)

F. RCM

G. KCC

H. NOM

I. EAC

J. BIS

K. Type 4X (environmental models only) when installed properly with IMP3EBAP

L. IP66/67 (environmental models only) when installed properly

M. IEC 60068:2-6 and 2-27

N. ONVIF Profile S, Profile G, Profile Q, and Profile T conformant

2.12 Acceptable Manufacturers:

A. Pelco, by Schneider Electric, Sarix Pro 3rd Gen IMP Mini DomeSeries, Part #IMP512-1IS and IMP321-1RS (Basis of Design)

B. Samsung.

C. Bosch.

D. Panasonic.

E. Siemens

F. Or approved equal.

2.13 OUTDOOR 270 DEGREE FIXED CCTV CAMERAS [TYPE “C”]

A. The IP Panoramic indoor/outdoor multi-sensor camera system shall transparently integrate video across all sensor's in the camera presenting a seamless fully stitched and blended total resolution of 12 megapixel (MPx), 2048 x 1536 x 4. The module shall include a pan function.

B. The IP Panoramic indoor/outdoor multi-sensor camera system shall provide a slot for a removable, local storage medium (not provided by camera manufacturer) (Micro SD) to capture video clips of varying lengths in accordance with the ONVIF G Profile.

C. The IP Panoramic indoor/outdoor multi-sensor camera system shall provide advanced low-light capabilities for day/night models with sensitivity down to 0.05 lux in the 270º model while in night mode.

D. The IP Panoramic indoor/outdoor multi-sensor camera system shall support industry standard Power over Ethernet Plus (PoE+) IEEE 802.3at, Class4 to supply power to the camera over the network.

E. The IP Panoramic indoor/outdoor multi-sensor camera system shall provide Wide Dynamic Range (WDR) up to 120 dB with dynamic adjustments through the User Interface across the cameras field of view.

F. The IP Panoramic indoor/outdoor multi-sensor camera system shall have a mechanical IR cut filter mechanism for increased sensitivity in low-light installations. Set points for the IR cut filter feature shall be configurable through an embedded Web browser.

G. The IP Panoramic indoor/outdoor multi-sensor camera system shall support H.264 High, Main or Base profiles, using constrained variable bit rate (CVBR) as the default, variable bit rate (VBR), or constant bit rate (CBR) with target range. The IP Panoramic indoor/outdoor multi-sensor camera system shall provide a service video stream in addition to and independent of the video streams.

H. The IP Panoramic indoor/outdoor multi-sensor camera system shall provide 802.1x port security to establish point-to-point access through a wired or wireless port using Extensible Authentication Protocol (EAP).

I. The IP Panoramic indoor/outdoor multi-sensor camera system shall conform to the ONVIF Profile S and Profile G, and support open architecture best practices with a published API available to third-party network video recording and management systems. The IP Panoramic indoor/outdoor multi-sensor camera system shall support SNMP v2c and v3. The IP Panoramic indoor/outdoor multi-sensor camera system shall support IPv6 configurations in conjunction with IPv4.

J. The IP Panoramic indoor/outdoor multi-sensor camera system shall provide Auto or Manual exposure settings for adjusting the amount of light detected by the camera sensor. The IP Panoramic indoor/outdoor multi-sensor camera system shall

provide user-selectable configurations for day/night auto mode. Transitional levels shall be used to set the desired light level for transitioning to night mode. Transition detect time shall control the length of time that the camera is exposed to a light level before changing to color or monochrome mode.

K. The IP Panoramic indoor/outdoor multi-sensor camera system shall be factory focused, requiring no manual adjustment of focus in the field.

L. The IP Panoramic indoor/outdoor multi-sensor camera system shall provide User and Group settings to assign permissions and access levels to the camera.

M. The IP Panoramic indoor/outdoor multi-sensor camera system shall support standard IT protocols. The IP Panoramic indoor/outdoor multi-sensor camera dome system shall provide a 1000Base-T network interface. The IP Panoramic indoor/outdoor multi-sensor camera system shall provide for a standards-based HTML interface.

N. The IP Panoramic indoor / outdoor network camera system shall include a camera module, back box, and lower dome. The IP Panoramic indoor/outdoor multi-sensor camera system shall be plenum-rated per NEC article 300.22(C)(2). The IP Panoramic indoor/outdoor multi-sensor camera system shall be vandal and tamper resistant with an impact resistance of IK10 (20 Joules). The IP Panoramic indoor/outdoor multi-sensor camera system shall be NEMA-4X, IP66 rated. The IP Panoramic indoor/outdoor multi-sensor camera system shall provide a 3/4-inch NPT conduit attachment on the side and top of the back box for in-ceiling and surface mounted applications. The IP Panoramic indoor/outdoor multi-sensor camera system shall attach to a standard (1900) 4-inch square box or standard 2-gang electrical box for surface mounted applications. The IP Panoramic indoor/outdoor multi-sensor camera system shall provide a 1.5- inch NPT conduit attachment for pendant mounted applications.

O. The IP Panoramic indoor/outdoor multi-sensor camera system shall provide Window Blanking Technology for user defined privacy areas.

P. The IP Panoramic indoor/outdoor multi-sensor camera system shall meet or exceed the following design and performance specifications.

1. Camera Specifications

a.	Imaging Device	1/3.2-inch
b.	Imager Type	CMOS
c.	Imager Readout	Progressive scan
d.	Highest Resolution	12 MP, 2048 x 1536 x 4
e.	Signal-to-Noise Ratio	>50 db
f.	Sensitivity	
	1) 180º Model	f/2.0, 0.3 lux color (33 ms), 0.14 lux mono (33 ms)
	2) 270º, 360º Models	f/2.5, 0.5 lux color (33 ms), 0.2 lux mono (33 ms)
g.	Day/Night Capabilities	Yes

h. Mechanical IR Cut Filter Yes, (ON/OFF/AUTO selectable) with different set points

i. Wide Dynamic Range 120 dB

2. Lens Specifications

a. Length

1) 270º Model f/2.5 ~ 2.7 mm

b. Field of View

1) 270º Model 270º horizontal, 73º vertical

3. Video Specifications

a. Video Streams Set of streams to deliver full resolution views; secondary stream that comprises a lower resolution mosaic of above streams

b. Frame Rate(s) User selectable up to 12.5 frames per second (fps)

c. Video Encoding H.264 High, Main, or Base profiles; MJPEG (mosaic stream only);

d. Pelco Smart Compression

e. Bit Rate Control Default maximum for Constrained Variable Rate (CVBR) at maximum resolution and frame rate

	Maximum Bit Rate	Typical Bit Rate at Recommended Settings
270º Model	25 Mbps	16 Mbps

f. Network

1) Supported Protocols TCP/IP, UDP/IP (Unicast, Multicast IGMP), UPnP, DNS, DHCP, RTP, RTSP, NTP, IPv4, IPv6, SNMP v2c/v3, QoS, HTTP, HTTPS, SSH, SSL, SMTP, FTP, ARP, ICMP, and+ 802.1x(EAP)
Note: IPv6 supports mixed IPv4 and IPv6 installations, but not IPv6-only deployments

2) Users

a) Unicast Up to 20 simultaneous depending on the resolution

		settings, and frame
	rate	
	b) Multicast	Unlimited H.264
g.	Security Access	Password protected
h.	Software Interface	Web browser view and setup
i.	Pelco System Integration	Pelco VideoXpert, Digital Sentry
j.	Open API Integration	Pelco API, Panomersive SDK, ONVIF Profile S and G
k.	Minimum System Requirements	
	1) Processor	Intel® Core™ i3 processor, 2.4 GHz
	2) Operating System	Microsoft Windows® 10, Windows® 7 (32- and 64-bit), or Windows Vista ®; or Mac® OS X 10.9 (or later)
	3) Memory	4 GB RAM
	4) Network Interface	100 Mbit (or greater)
	5) Monitor	Minimum of 1024 x 768 resolution, 16- or 32-bit pixel color resolution
	6) Web Browser	Internet Explorer® 8.0 (or later); Mozilla® Firefox® 35 (or later); Google® Chrome 40 (or later)

4. Range Guidance

	Requirement	270º
Detection	20 Pix/m (7 Pix/ft)	60 m (172 ft)
Classification	40 Pix/m (13 Pix/ft)	30 m (93 ft)
Recognition	60 Pix/m (20 Pix/ft)	20 m (60 ft)
Identification	150 Pix/m (49 Pix/ft)	8 m (25 ft)

5. Electrical Specifications

a.	Network Port	RJ-45 connector for 1000Base-T 1 Gigabit/sec Auto MDI/MDI-X PoE+; Class 4
b.	Cabling Type	Category 5 or better
c.	Input Power	PoE+ (IEEE 802.3at, Class 4)
d.	Local Storage	Micro SD, SDHC
e.	Alarm	
	1) Unsupervised	Detects open or closed alarm state
	2) Supervised external	Detects open and short alarm state with 1-kohm resistor to detect alarm tampering

3) Input maximum — 3.5 VDC maximum, 3.5 mA

f. Relay Output — ±32 VDC maximum, 150 mA maximum

g. Audio

1) Streaming — Bidirectional: full or half duplex

2) Input/Output — 600 ohm differential, 1Vp-p max. signal level

3) Compression — G.711 PCM 8 bit, 8 kHz mono at 64 kbit/s

6. Back box and lower dome specifications

a. Indoor Vandal, In-Ceiling

1) Installation — Single back box for suspended or hard ceiling applications

2) Back Box — Plenum rated

3) Cable Entry — 0.75-inch NPT or 25 mm conduit attachments on side and top of back box

4) Operating Temperatures — –10º to 50ºC (14º to 122ºF)

5) Operating Humidity — 15 to 85%, RH non-condensing

6) Impact Resistance — IK10

7) Shock and Vibration — EN50155 Category 1, Class B; IEC 60068:2-6 and 2-27, ISTA-2A, Sequence 5, MIL810G

8) Construction — Alodine aluminum

b. Indoor Vandal, Surface Mount

1) Installation — Attaches to standard 4-inch square outlet box and 2-gang electrical box; 0.75-inch NTP or 25 mm conduit attachments on side back box; wire entry through grommet on top of back box

2) Operating Temperatures — –10º to 50ºC (14º to 122ºF)

3) Operating Humidity — 15 to 85%, RH non-condensing

4) Impact Resistance — IK10

5) Shock and Vibration — EN50155 Category 1, Class B; IEC 60068:2-6 and 2-27, ISTA-2A, Sequence 5, MIL810G

6) Construction — Alodine aluminum

c. Indoor Vandal, Pendant

1) Installation — 1.5-inch NPT conduit/pipe attachment

2) Operating Temperatures — –10º to 50ºC (14º to 122ºF)

3) Operating Humidity — 15 to 85%, RH non-condensing

4) Impact Resistance — IK10

5) Shock and Vibration — EN50155 Category 1, Class B; IEC 60068:2-6 and 2-27, ISTA-2A, Sequence 5, MIL810G

6) Construction — Alodine aluminum

d. Environmental Vandal, In-Ceiling
1) Installation Single back box for suspended or hard ceiling applications
2) Back Box Plenum rated
3) Cable Entry 0.75-inch NPT or 25 mm conduit attachments on side and top of back box
4) Operating Temperatures –40º to 50ºC (–40º to 122ºF)
5) Operating Humidity 10 to 95%, RH non-condensing
6) Impact Resistance IK10
7) Shock and Vibration EN50155 Category 1, Class B; IEC 60068:2-6 and 2-27, ISTA-2A, Sequence 5, MIL810G
8) Construction Alodine aluminum
9) Ingress protection IP66

e. Environmental Vandal, Surface Mount
1) Installation Attaches to standard 4-inch square outlet box and 2-gang electrical box
2) Cable Entry 0.75-inch NPT or 25 mm conduit attachments on side and top of back box. Wire entry through grommet on top of back box
3) Operating Temperatures –40º to 50ºC (–40º to 122ºF)
4) Operating Humidity 10 to 95%, RH condensing
5) Impact Resistance IK10
6) Shock and Vibration EN50155 Category 1, Class B; IEC 60068:2-6 and 2-27, ISTA-2A, Sequence 5, MIL810G
7) Construction Alodine aluminum
8) Ingress protection IP66
9)

f. Environmental Vandal, Pendant
1) Installation 1.5-inch NPT thread for use with Pelco wall mounts
2) Operating Temperatures –40º to 50ºC (–40º to 122ºF)
3) Operating Humidity 10 to 95%, RH condensing
4) Impact Resistance IK10
5) Shock and Vibration EN50155 Category 1, Class B; IEC 60068:2-6 and 2-27, ISTA-2A, Sequence 5, MIL810G
6) Construction Alodine aluminum
7) Ingress protection IP66

7. Dome System Specifications
a. Indoor Vandal, In-Ceiling 5.90 cm (2.32 in) above ceiling, lower dome 9.85 cm (3.88 in) below ceiling, 16.15 cm (6.36 in) diameter

b. Indoor Vandal, Surface Mount 14.65 cm (5.76 in) overall length (including dome) by 15.93 cm (6.27 in) diameter
c. Indoor Vandal, Pendant 17.80 cm (7.00 in) overall length (including dome) by 15.75 cm (6.20 in) diameter
d. Environmental Vandal, In-Ceiling 5.90 cm (2.32 in) above ceiling, lower dome 9.85 cm (3.88 in) below ceiling, 16.15 cm (6.36 in) diameter
e. Environmental Vandal, Surface 14.65 cm (5.76 in) overall length (including dome) by 15.93 cm (6.27 in) diameter
f. Environmental Vandal, Pendant 17.80 cm (7.00 in) overall length (including dome) by 15.75 cm (6.20 in) diameter

8. Mechanical Specifications
   a. Dome Attenuation
      1) Clear f/0.0 light loss
      2) Smoked f/1.0 light loss
   b. Pan Adjustable (All Models) 370º

Q. Certifications/Ratings

1. CE, Class A
2. FCC Part 15, Class A
3. UL/cUL Listed
4. ICES-003, Class A
5. KC
6. C-Tick
7. CB Scheme ITE
8. NEMA Type 4X, and IP66 rating (Environmental Vandal)
9. RoHS, Lead Free, REACH
10. NTCIP 1205
11. IEC 62676 image quality measurement

R. Acceptable Manufacturers:

1. Pelco, by Schneider Electric, IMM 12MOP 270 Environmental Pendant, Part #IMM12027- 1EP (Basis of Design)

2. Arecont Vision.

3. Samsung.

4. Or approved equal.

2.14 OUTDOOR 180 DEGREE FIXED CCTV CAMERA [TYPE “D”]

A. Provide 12 megapixel (MP) IP outdoor video cameras employing one 4072H x 3046V image sensor, capable of providing 180-degree surveillance and seven independent video streams, with no blind spots, with the following minimum characteristics:

1. On-board dewarping software to convert the spherical video image into a continuous flat view and panaromic view.
   a. Local 3D dewarping providing 4x VCams at max 1MP each including up to 2x panoramic at 5.9 MP each.

2. H.264 and MJEG compression.

3. Controllable mechanism IR filter.

4. 14 fps for maximum resolution, 30 fps for 2MP resolution and below.

5. Configurable privacy regions and motion detection regions.

6. Built-in Micro SD Card slot, 256 GB capacity, speed class 10.

7. Built-in web server.

8. PoE (IEEE standard 802.af) or 12V powered.

9. IP66, IP67, IP68 (2 m, 30 mins) and IP69K.

B. Video:

1. Sensor: 12.4 MP (approximately) 1/2.3" Sony EXMOR R CMOS Sensor

2. Minimum illumination: 0.10 lux (50 IRE, F/2.4)

3. Scanning: Progressive

4. Automatic white balance (AWB): 2,500K to 8,000K (approximately)

5. Privacy zone definition: 10 configurable zones

6. Wide Dynamic Range (WDR): Electronic WDR 60 Db

7. Viewing angle: 187o horizontal, 74o vertical (Panoramic Stream), 187o horizontal, 162o vertical (Fisheye Stream).

8. Compression types: H.264 (12 streams), MJPEG.

9. H.264 Resolutions (panoramic): a. 3840 x 1536 (5.9 MP)
   b. 3360 x 1344 (4.52 MP)
   c. 2560 x 1024 (2.62 MP)
   d. 1920 x 768 (1.47 MP)
   e. 1280 x 512 (0.66 MP)
   f. 800 x 320 (0.26 MP)

10. H.264 Resolutions (VCAM): a. 1280 x 720 (0.92 MP)
    b. 640 x 480 (0.31 MP)

11. H.264 Resolutions (Fisheye): a. 3360 x 3000 (10.1 MP)
    b. 2688 x 2400 (6.45 MP)
    c. 2240 x 2000 (4.48 MP)
    d. 1568 x 1400 (2.20 MP)
    e. 1120 x 1000 (1.12 MP)
    f. 672 x 600 (0.40 MP)

12. MJPEG Resolution:
    a. 672 x 600 (0.40 MP)

13. Bit Rate: 0.8 Mbps – 10 Mbps (Constant)

14. Frame rate: 0-30 fps

15. Presentation: Video views shall be available in both fisheye and dewarped (flat) views as follows:
    a. Fisheye views: 3 streams, one of which shall be MJPEG
    b. Dewarped views: 4 streams of independent VCams, up to two of which can be Panoramic views

c. Panoramic views: 2 streams, each capable of displaying a dewarped view of a full 180° panorama:
   1) Means shall be provided to correct distortion in the panoramic view introduced when the camera is tilted downwards or upwards between +70 and -70° from horizontal.
   2) Means shall be provided to electronically vary the vertical position of the panorama view with respect to the center of the lens image.

16. Onboard Micro SD card storage, 256 GB capacity, speed class 10.

17. Pre-loaded video motion analytic.

C. Network:

1. Connectivity: 1000BASE-TX Ethernet with RJ-45 connector

2. Protocols supported
   a. Transmission Control Protocol (TCP), Internet Protocol (IP) v4, User Datagram Protocol (UDP)
   b. Configuration: Dynamic Host Configuration Protocol (DHCP)
   c. Web services: Hypertext Transfer Protocol (HTTP)
   d. Network services: Domain Name System (DNS), Network Time Protocol (NTP), Internet Control Message Protocol (ICMP), Universal Plug and Play (UPnP)
   e. Media: Real-Time Transport Protocol (RTP), Real-Time Streaming Protocol (RTSP)
   f. Multicast: Internet Group Management Protocol (IGMP)
   g. Notifications: Simple Mail Transfer Protocol (SMTP)

3. Unicast - The 180-degree camera shall support 20 simultaneous users of independent streams.

4. Multicast - The 180-degree camera shall support multicast for an H.264 main camera stream.

5. Security: The 180-degree camera shall have a user configurable password feature.

D. Electrical, Mechanical and Environmental:

1. 12VDC or PoE (IEEE standard 802.3af) – 48 VDC nominal.

2. Material: Polymer & aluminum

3. Anti-tamper: HEX security locking screw

4. Dimensions: 220 x 160 x 138 mm (8.7” x 6.3” x 5.4”)

5. Temperature Operating: -40° C to 55° C (-

40° F to 131°F Storage -40° C to 70° C (-

40° F to 158°F

6. Environmental rating: IP66, IP67, IP68 (2 m for 30 mins), IP69K
7. Impact rating: IK10+
8. Mounting Accessories:
   a. Pendant
   b. Pole
   c. Wall

E. Acceptable Manufacturers:

1. Pelco, by Schneider Electric, EVOLN 180 ENVRMTL SRFMT 12M IPCAM WT Environmental, Part # EVO-180-WED-P (Basis of Design)

2. Arecont Vision.

3. Samsung.

4. Or approved equal.

2.15 CCTV VIDEO MANAGEMENT SYSTEM (VMS)

A. Scalable Microsoft Windows™-based video management and surveillance system in a single server, as follows:

1. A management database server application to maintain the database of cameras and recording devices and to provide a web-based administrative portal to manage the video surveillance system.

2. A stream management application to route video traffic to users as requested and appropriate.

3. A client presentation application to allow users to view and manage live and recorded video.

4. A storage management application to manage the video storage resources on the network.

B. The IP video management system shall record video and audio streams from IP cameras and video encoders on the network.

1. Video: MPEG4, MJPEG, H.264, or H.265 in High, Main, or Base Profile streams from both standard resolution and megapixel cameras

2. Audio: Bidirectional, full or half duplex compressed via G.711 PCM 8 bit, 8khz mono at 64 kbit/s.

C. The system shall support recording schedules, including the ability to record based on motion, analytic, and alarm events.

D. The IP video management system shall be capable of continuous scheduled alarm/event and motion recording. Pre- and post- alarm recording shall also be available and shall be fully programmable on a per channel basis.

E. Recording Time and Storage: 30 days, 24/7 operation, minimum.

F. The IP video management system shall have the ability to record and playback audio streams along with associated video.

G. The IP Video Management System shall support recording of primary or secondary streams, individually or simultaneously. The server application can be configured to record a stream in unicast or multicast.

H. The IP Video Management System shall support video bookmarking, such that users can identify and recall important moments in recorded video based on the bookmark name or notes that are associated with it.

I. The IP video management system shall allow the administrator to set minimum and maximum retention periods for recorded video.

J. The IP video management system shall support network health and monitoring utilizing third-party SNMP monitoring tools.

K. The IP video management system shall indicate system performance and operation status utilizing a variety of reports.

L. The system shall be configurable remotely or over a network.

M. The system shall allow users to manually add cameras and devices by IP address.

N. The system shall allow users with sufficient rights to control cameras (pan, tilt, and/or zoom).

O. The system shall support aggregation by a higher-level system, tying multiple servers together in a single, unified environment.

P. The system shall support third-party cameras using ONVIF profiles S or native drivers.

Q. The IP VMS shall support Lightweight Directory Access Protocol (LDAP) to authenticate users.

R. The IP video management system shall allow archival of video data to external network locations or NAS devices over a network connection. The archival schedule shall be either automatic at user-defined intervals or manually executed.

S. The server shall support semantic grouping and organization of cameras/devices into groups using “tags”.

T. The system shall allow users to export video on request; exported video shall be stored locally on the server or on another network location selected by the administrator.

U. The system shall support aggregation by a higher-level environment, allowing the IP video management system to belong to a confederation of servers.

V. The VMS shall be accessible via a web browser with no software installed for live and playback functionality.

W. Client application:

1. Shall be Windows-based, providing an environment from which authorized users can watch live and recorded video on a computer in which the application has been installed.

2. Shall be web-based, providing an environment from which authorized users can watch live and recorded video on a computer in which the application has not been installed.

3. Shall be capable of being used only for the application, with no other access provided to other applications or the internet.

4. Shall be capable of being setup as either unicast or multicast.

5. Shall be able to connect with multi-server access (MSA).

X. Live View and Playback

1. A list of video and audio sources which users are authorized to access shall be displayed.

2. Each video source shall indicate a list of current viewers to a user with appropriate permissions.

3. Each video source that is being viewed shall display whether there are current alarms associated with the source.

4. The client shall indicate when there has been a reduction in video quality for the displayed video sources.

5. The client computer shall be able to connect to an unlimited number of recorders simultaneously to display live and recorded video.

6. The client shall allow video streams to be selectable from a system tree on an individual camera, individual system, client defined local groups, or from pre-defined recorder-based groups.

7. The client shall playback audio associated with video sources for users with the correct permissions.

8. Users shall be able to seamlessly switch between live and recorded video on the fly.

9. Live View

    a. For live view, all cells will be displayed at the highest quality possible, based on the bandwidth and client hardware. The Client application will use the primary stream from a video source as the default; if the bandwidth or client hardware are approaching the limit, the video quality of as many streams as necessary will then be streamed as secondary or at MJPEG quality.

10. Pan Tilt Zoom (PTZ)
    a. Digital Zoom - An operator shall be able to digitally zoom in a video stream in live or playback mode.
    b. Optical Zoom and Pan Tilt Control: Operators shall be able to use a mouse or joystick to control PTZ cameras.
    c. The Client application shall be able to perform digital de-warping of 180-, 270-, and 360-degree cameras, and should be able to save the de-warped views for replay.

11. Playback
    a. The Client application shall enable simultaneous playback for up to nine (9) synchronized cameras.
    b. The Client application shall have the capability to playback non-synchronized cameras at one time in different cells.
    c. For viewing recorded video, cells 1/4 the size of the tab or larger shall display full- frame rate video, and cells smaller than 1/4 the size of the tab shall playback only I- Frames to conserve bandwidth and processing power.
    d. When hovering over a recorded video time bar, an operator shall see a thumbnail representing the contents of the video stream at that point in time.

    e. Available playback control functions:

1) date-time selection
2) synchronized playback of selected cells within a tab
3) play video at normal speed
4) pause video and advance one frame
5) pause video and rewind one frame
6) fast forward video at speeds up to 128x
7) rewind video at speeds up to 128x
8) rewinds video 30 seconds and initiates playback
9) forward video to live playback
10) take snapshot of the current frame

f. Hovering over a video playback cell with a mouse shall display the playback control menu.

12. The user shall be able to configure a rotating sequence of cameras, allowing the application to cycle through cameras relevant to the operator without intervention.
    a. Using keyboard input alone, the operator can type a camera number, a preset number, or a time (hhmm format) to jump to a selected camera. No mouse input is necessary.

13. The user shall be able to configure a sequence of cameras that appear on alarm, allowing the application to cycle cameras when an event or alarm relevant to the user occurs.

14. The user shall be able to create a sequence of cameras by dragging and dropping camera names in a single user interface.

Y. Provide VMS from one of the following:

1. Pelco VideoXpert Professional (Basis of Design)

2. Milestone XProtect Professional.

3. OnSSI, Inc. Ocularis Professional.

2.16 VMS SERVER

A. Provide rack-mounted or tower servers, quantities as shown on the drawings or as noted in these specifications, for managing up to 64 IP CCTV cameras.

B. Rack-Mounted Server Specifications / Minimum System Requirements:

1.	Processor:	Intel® Xeon® E5-2620 v4
2.	Operating System:	Microsoft Windows 10 IoT Enterprise 64-bit (LTSB)
3.	RAM:	16 GB
4.	OS Drive:	SSD 200 GB
5.	HDD:	Up to 28 TB (depending on model)

a. RAID Level: RAID5 / RAID6 / JBOD (depending on model)

6. Video
   a. Outputs:
      1) VGA
7. USB Ports:
   a. USB 2.0: 2x Front; 1x Rear
   b. USB 3.0: 1x Rear
8. Networking: 4x Gigabit Ethernet (1000Base-T) Ports
   a. Throughput Up to 450 Mbps
9. Environmental:
   a. Temperature
      1) Operating 10° to 35°C (50° to 95°F) with no direct sunlight
      2) Storage -40° to 65°C (-40° to 149°F)
   b. Operating Humidity 5% to 95% with 33°C (91°F) max. dew point, non-condensing
   c. Non-Operating Relative Humidity 10% to 80% with 29°C (84.2°F) max. dew point
   d. Operating Altitude Max. 3048 m (10,000 ft)
   e. Operating Vibration 0.26 Grms at 5 Hz (operation orientations)
10. Dimensions: 64.8 x 43.4 x 8.68 cm (26.3 x 17.1 x 3.4 in) without rack ears

C. Provide VMS tower server from one of the following:

1. Pelco Model #VXP-P2-72-5-D (Basis of Design)

2. Milestone.

3. OnSSI, Inc.

2.17 SECURITY WORKSTATION

A. Provide one (1) CCTV workstation for use by the School Police officer..

B. Specifications / Minimum System Requirements:

1. Processor: Intel Core™ i7-6700

2. Operating System: Microsoft Windows 10 IoT Enterprise 64-bit (LTSB)

3. OS Drive: m.2 256 GB

4. RAM: 8 GB DDR4

5. Video
   a. Outputs:
      1) 2X DisplayPort
      2) HDMI

b. System Intel HD Graphics 530 (shared memory)
c. Maximum Video Resolution
Per Output Type 1)
HDMI 1.4 4096 x 2304 at 24
Hz
2) DP 4096 x 2304 at 60 Hz
d. Video Standards
1) NTSC 60 Hz capable
2) PAL 75 Hz capable

6. Audio
a. Inputs Universal Audio Jack (front)
b. Outputs Universal Audio Jack (front), Line Out (rear), Internal Speaker,
DisplayPort Audio, HDMI Audio
c. Connector Types 3.5 mm 4 pole (In/Out), 3.5 mm 3 pole (Out), DP cable (Out), HDMI Cable (Out)

7. USB Ports
a. USB 2.0 2x front, 2x rear
b. USB 3.0 1x front, 4x rear
c. USB 3.1 Type-C 1x front

8. Enhanced keyboard:
a. The keyboard must be compatible with all distributed, network video management systems.
b. The keyboard must support USB 2.0 protocol, and the USB must operate at full- speed.
9. 3D Mouse Controller
a. The 3D Mouse must be compatible with all distributed, network video management components.
b. Patented six-degrees-of-freedom (6DoF) sensor – Intuitively and precisely navigate digital models or camera positions in 3D space.
c. Advanced ergonomic design – The full-size, soft-coated hand rest positions the hand comfortably, and 15 large, soft-touch, function keys allow quick access to frequently used commands.
d. QuickView Keys – Fingertip access to 12 views makes it easier to switch cameras.
e. Intelligent Function Keys – Easy access to 4 application commands for an optimized workflow.
f. On-Screen Display – Provides a visual reminder of function key assignments on your computer screen.
g. 3D Space Mouse Modifiers – Fingertip access to Ctrl, Shift, Alt and Esc keys saves time by reducing the need to move your hand between mouse and 3D Mouse.
h. Virtual NumPad – Allows direct numerical input into your application using your standard mouse rather than the 3D Mouse.
i. The 3D Mouse must be part of an integrated system and shall be configured so any number can be added to the system. When combined with user interfaces (UIs), network storage managers

(NSM's), encoders, IP cameras, and video consoles, the 3D Mouse forms an integral part of a complete network-based video control system.

j. Hardware
   1) Power Supply Input Connector Type: Universal, interchangeable
   2) 3D Space Mouse Interface USB 2.0
   3) Cable USB
   4) Module Specifications
      a) 3D Space Mouse Keypad
      b) Joystick: Fully proportional PTZ, variable speed; with zoom, iris, and focus controls.

10. Networking
    a. Gigabit Ethernet (1000Base-T) ports 1x
    b. IP Version IPv4 and IPv6

11. Browser: Current version of Google Chrome, Mozilla Firefox, or Microsoft Edge

12. Power
    a. Input 90 to 264 VAC, 47 to 63 Hz, 3 A/1.5 A
    b. Supply Internal 180 W (Bronze)
    c. Consumption 614 BTU/hr maximum (180 W power supply)

13. Environmental
    a. Temperature
       1) Operating 0° to 35°C (32° to 95°F) with no direct sunlight
       2) Storage -40° to 65°C (-40° to 149°F)
    b. Operating Humidity 5% to 95% (non-condensing)
    c. Non-Operating Relative Humidity 10% to 90% non-condensing
    d. Operating Altitude 15.2 to 3048 m (-50 to 10,000 ft)
    e. Operating Vibration 0.66 Grms

C. Pelco Model # VXP-WKS (basis of design).

   1. Or approved equal.

2.18 SECURITY MONITORS

A. Provide one (1) 19" (minimum) LCD high definition flat screen monitor, cables, power cords and desktop or wall-mount for use by the School Police officer. Coordinate exact mounting method and location in the field.

   1. Pelco Model # SMT-1935 (basis of design).

   2. Or approved equal.

B. Provide two (2) 43" (minimum) backlit, LCD full high definition flat screen monitor, cables, power cords and desktop or wall-mount, one (1) each for use in Main Office 106 and Principal's Office 107. Coordinate exact mounting method and location(s) in the field.

1. Pelco Model # PMCL643 (basis of design).

2. Or approved equal.

2.19 EQUIPMENT CABINETS

A. Provide stand-alone EIA compliant 24" wide, 36" deep (minimum) digital security network enclosure(s), quantities as shown on the drawings or as noted in these specifications.

1. Fully welded construction, UL listed load capacity 1,600 lbs. minimum.

2. Two (2) pairs of fully adjustable steel cage nut rack rail with 6MM mounting hardware in universal EIA spacing, black e-coat finish and numbered rack spaces, front to rear passive cooling.

3. Grounding busbar, mounting brackets, patch panel brackets, equipment brackets, power strip and fan kit.

B. Provide from one of the following:

1. Middle Atlantic Products SNE Series (basis of design).

2. Hubbell.

3. Chatsworth.

4. Or approved equal.

2.20 UPS

A. Continuous duty, single-phase static Uninterruptible Power Supply (UPS), with double conversion online topology.

B. 5000VA, 208/240VAC to 120VAC step down with surge protection.

1. Internal bypass and input power factor correction.

2. Input disconnect and filter stage, input PFC power stage, energy storage stage (DC bus capacitor bank), output power (inverter) stage, bypass and a battery charger.

3. Microcontroller based power module and fault detection.
   a. The input disconnect and filter stage shall contain an input back-feed relay, input filter, transient suppression, and battery select switches (mechanical).
   b. The input PFC power stage shall contain non-isolated power factor correcting AC/DC converters, capable of full power operation over a very wide input voltage range or from a nominal DC battery voltage.
   c. The energy storage stage shall be a split DC bus capacitor handling seamless transitions from battery to line and vice versa, as well as the low and high frequency power stages ripple.
   d. The output power (inverter) stage shall operate directly from the DC bus and produce a configurable AC output voltage of 208 V or 240 V output, as noted or as required. UPS output shall be connected either to the inverter or through a bypass relay, contactor, or static switch to the filtered input line.
   e. The UPS shall contain a battery charger, which operates from the DC bus. The UPS batteries shall be modular, hot-swappable, and user-replaceable. The UPS shall be able to be restarted immediately after a prolonged power outage without waiting for the battery to be recharged.

4. Flash memory to facilitate firmware upgrades.

5. Provide a graphical LCD display with multicolor backlight with detailed information, with the ability to configure the display locally.

6. Provide an imbedded integrated UPS Network Management Card 2 with Environmental Monitoring.

7. The UPS shall provide early-warning fault analysis on batteries and shall project battery replacement dates.

8. Shall comply with ENERGY STAR (USA), FCC Part 15 Class A, UL 1778.

9. Battery shall be maintenance-free sealed lead-acid battery with suspended electrolyte, leak proof, 960 VAH.

C. Provide UPS from one of the following:

1. APC by Schneider Electric Model #SRT5KXLT-5KTF (Basis of Design)

2. Liebert.

3. Or approved equal.

2.21 NETWORK SWITCH(ES)

A. Provide 24-port or 54-port Gigabit PoE+ network switches, with mounting hardware, sizes and quantities as shown on the drawings or noted in the specifications, with patch cables and power cords.

B. 24-port switch Characteristics:

1. Data Transfer Rate: 2000 Mbps (full duplex)

2. Data RAM Buffer: 512 KB

3. Switch Fabric: 48 Gbps.

4. PoE budget: 370W

5. Overcurrent and circuit sorting protection.

C. 54-port switch Characteristics:

1. Data Transfer Rate: 2000 Mbps (full duplex)

2. Data RAM Buffer: 12Mbits

3. Switch fabric: 104 Gbps

4. PoE budget: 740W

5. Overcurrent and circuit sorting protection.

D. Provide rack mounting kit and power cord.

E. Provide network switches from the following:

1. 24 port: TRENDnet Model # TPE-TG240G; 54-port: TRENDnet Model # TPE-5048WS (basis of design).

2. Or approved equal.

2.22 CABLE MANAGEMENT, PATCH PANELS, PATCH CORDS AND FIBER TERMINATION HARDWARE

A. Refer to Specification Section 27 1000 for requirements.

2.23 FIBER MEDIA CONVERTERS

A. Provide rack-mountable and stand-alone media converters for CCTV camera locations exceeding 90 meters cable distance from the CCTV network switch.

B. Provide 12-slot media converter racks, with internal universal power supply, hot-swappable converters, mounting brackets, power cord and mounting hardware, quantities as shown on the drawings, as noted in these specifications, or as required based on field conditions.

1. PROVIDE Gigabit Ethernet media converter modules, Standards-based 1000Base-T to 1000Base-SX/LX, Layer 1, hot-swappable.

C. Provide stand-alone 2-port 10/100/1000 copper to fiber media converter with IEEE 802.3at PoE+ on the copper port and external 120VAC/56VDC power supply.

D. Provide fiber media converters and racks from the following:

1. Transition Networks (basis of design).

2. Omnitron.

3. Black Box

4. Or approved equal.

2.24 CCTV CABLES

A. Refer to Specification Sections 27 1000 and 28 0513 for cable requirements.

PART 3 - EXECUTION

3.1 GENERAL

A. The Contractor shall provide all surveillance equipment being furnished under the contact, unless otherwise noted. Equipment shall be installed in accordance with the manufacturers' recommendations. This information shall be provided to the Owner and the Engineer at the time catalog cuts and shop drawings are submitted for approval. The Contractor shall perform all setting, adjustment, and programming required for a complete and operational surveillance system as directed by the Owner and the Engineer.

3.2 CAMERAS, LENSES, HOUSINGS, MOUNTS

A. All prepackaged cameras/housings shall be painted or otherwise made to blend into the environment.

B. Prepackaged cameras/housings shall be mounted in an unobtrusive manner. Final approval of the installation shall be by the Owner, Architect and Engineer.

C. Prepackaged cameras/housings installed in suspended acoustical tile ceilings shall be supported independently of the ceiling grid by wires or other approved supporting means.

D. All prepackaged cameras/housings shall be properly grounded with a Number 6AWG (minimum) copper insulated cable.

E. Provide additional cables or equipment as required for proper synchronization.

3.3 CABLING

A. All distribution cables installed exterior to the building shall be installed in rigid galvanized steel (RGS) or IMC conduit, minimum size 3/4 inch. Liquidtight flexible metal conduit, minimum size 3/4 inch, in lengths not exceeding three (3) feet and with approved fittings, shall be permitted for final connections to weatherproof cameras.

B. All distribution cables installed in interior locations where exposed or subject to damage or where installed in walls or non-accessible ceilings shall be installed in EMT. Flexible metal conduit, minimum size 3/4 inch, shall be permitted (in interior locations and where permitted by the NEC) for final connections to outlet boxes installed in suspended acoustical tile ceilings.

C. All distribution cables installed above accessible suspended acoustical tile ceilings shall be installed in EMT conduit or flexible metallic conduit.

D. No cable shall be exposed to any physical damage. Cables shall be protected from point of termination to point of termination. No cables shall be visible once installed.

E. Refer to Division 26 Specifications for raceway and sleeve requirements. Refer to Division 07 Specifications for fireproofing requirements.

3.4 LABELING

A. All components shall follow the labeling plan as directed by the Owner and the Engineer and must be updated for an as-built submittal. This will include all cables, conduits, patch panels, jumper cords and equipment.

B. The Contractor shall label all components following this plan, using permanent/legible typed or machine engraved labels.

C. Handwritten labels are not acceptable.

D. Plastic embossing tape is not acceptable.

E. All labels shall be machine printed on clear or opaque tape, stenciled onto adhesive labels, or type written onto adhesive labels. The font shall be at least 1/8 inch in height, block characters, and legible. The text shall be of a color contrasting with the label such that it may be easily read. If labeling tape is utilized, the width of the tape shall not exceed 3/8 inch, and the font color shall contrast with the background, or as detailed on drawings.

F. All components shall be labeled with: component name or number and port assignment. Labeling plan to include nearest room number, end-user name, etc.

G. A schematic plan clearly labeled with all component names and numbers shall be included in the as-built drawings. All labels shall correspond to labeling plan, component informational matrix, and with final test reports.

3.5 CONFIGURATION AND PROGRAMMING

A. Configure all CCTV equipment for proper operation. Properly set all dipswitches, assign camera names, aim cameras, verify proper scenes, set up recording sequences and adjust all equipment as needed until the District is satisfied with the operation of the camera system.

B. Set up workstations, load all software, set up viewing and administrative privileges. Configure viewing, recording, alarm and report screens. Set up hot keys.

C. Set up monitors and configure multi-camera views.

D. Coordinate with the District and provide configuration for all IP addresses and for CCTV system reporting to the district central monitoring site.

3.6 TESTING

A. Contractor shall test each and every component installed to ensure proper configuration and operation. The Owner reserves the right to have a representative present during any portion or all of the testing process. The Owner and the Engineer shall be notified two (2) weeks prior to any testing so testing can be witnessed.

B. Contractor shall provide testing documentation as per the Submittal Section of Specification Section 280500.

C. Before conducting a final inspection, the Contractor shall perform a series of system installation performance tests. The Contractor shall submit for approval a proposal describing the test procedures, test result forms, and timetable for component testing.

D. Refer to Specification 280500, paragraph 3.4 for additional requirements.

3.7 TRAINING

A. Refer to Specification 280500, paragraph 3.5.

END OF SECTION 28 2300

PROJECT

THE SCHOOL DISTRICT OF PHILADELPHIA

OFFICE OF CAPITAL PROGRAMS

EDWARD GIDEON SCHOOL

ELECTRICAL UPGRADES

2817 WEST GLENWOOD AVE.
PHILADELPHIA, PA 19121

MEP ENGINEER

FXB PARTNERSHIPS THROUGH ENGINEERING

5 Christy Drive, Suite 307
Chadds Ford, PA 19317
610.558.3464 office
www.fxbinc.com

Engineering Excellence Since 1968

DRAWING INDEX

CURRENT ISSUE:
ADDENDUM #06

		A	B	C	D	0	1
		02.22.19 - ISSUE FOR 25% REVIEW	04.26.19 - ISSUE FOR 60% REVIEW	06.28.19 - ISSUE FOR 90% REVIEW	08.30.19 - ISSUE FOR 100% REVIEW	06.26.20 - ISSUE FOR BID	01.08.21 - ADDENDUM #06
COVER SHEET							
CS1.0	COVER SHEET	○	○	○	○	○	●
ELECTRICAL							
E1.0	ELECTRICAL SYMBOLS, DETAILS, NOTES & ABBREVIATIONS	○	○	○	○	○	
ED1.0	ELECTRICAL DEMOLITION LIGHTING PLAN - BASEMENT	○	○	○	○	○	
ED1.1	ELECTRICAL DEMOLITION LIGHTING PLAN - FIRST FLOOR	○	○	○	○	○	
ED1.2	ELECTRICAL DEMOLITION LIGHTING PLAN - SECOND FLOOR	○	○	○	○	○	
ED1.3	ELECTRICAL DEMOLITION LIGHTING PLAN - THIRD FLOOR	○	○	○	○	○	
ED2.0	ELECTRICAL DEMOLITION POWER PLAN - BASEMENT	○	○	○	○	○	●
ED2.1	ELECTRICAL DEMOLITION POWER PLAN - FIRST FLOOR	○	○	○	○	○	
ED2.2	ELECTRICAL DEMOLITION POWER PLAN - SECOND FLOOR	○	○	○	○	○	
ED2.3	ELECTRICAL DEMOLITION POWER PLAN - THIRD FLOOR	○	○	○	○	○	
ED3.0	ELECTRICAL PANEL SCHEDULES - DEMOLITION (REMOVED FROM SET 10-22-19)			○	○		
ED3.1	ELECTRICAL PANEL SCHEDULES - DEMOLITION (REMOVED FROM SET 10-22-19)			○	○		
ED4.0	EXISTING CONDITION PHOTOS		○	○	○	○	●
E2.0	ELECTRICAL LIGHTING PLAN - BASEMENT	○	○	○	○	○	
E2.1	ELECTRICAL LIGHTING PLAN - FIRST FLOOR	○	○	○	○	○	
E2.2	ELECTRICAL LIGHTING PLAN - SECOND FLOOR	○	○	○	○	○	
E2.3	ELECTRICAL LIGHTING PLAN - THIRD FLOOR	○	○	○	○	○	
E3.0	ELECTRICAL POWER PLAN - BASEMENT	○	○	○	○	○	●
E3.1	ELECTRICAL POWER PLAN - FIRST FLOOR	○	○	○	○	○	
E3.2	ELECTRICAL POWER PLAN - SECOND FLOOR	○	○	○	○	○	
E3.3	ELECTRICAL POWER PLAN - THIRD FLOOR	○	○	○	○	○	
E4.0	ELECTRICAL ONE LINE DIAGRAM - DEMOLITION		○	○	○	○	
E4.1	ELECTRICAL ONE LINE DIAGRAM - INSTALLATION		○	○	○	○	●
E4.2	ELECTRICAL PANEL SCHEDULES - INSTALLATION		○	○	○	○	
E4.3	ELECTRICAL PANEL SCHEDULES - INSTALLATION		○	○	○	○	●
E4.4	ELECTRICAL PANEL SCHEDULES - INSTALLATION		○	○	○	○	
E4.5	ELECTRICAL PANEL SCHEDULES - INSTALLATION (ADDED TO SET 10-22-19)					○	
E5.0	ELECTRICAL DETAILS	○	○	○	○	○	●
E5.1	ELECTRICAL DETAILS	○	○	○	○	○	●
E5.2	ELECTRICAL DETAILS (ADDED TO SET 10-22-19)					○	
E5.3	ELECTRICAL DETAILS (ADDED TO SET 10-22-19)					○	
E6.0	TELECOM RISER & DETAILS				○	○	
ESP1.0	ELECTRICAL SITE PLAN				○	○	●
FIRE ALARM							
FA1.0	FIRE ALARM SYMBOLS, NOTES & ABBREVIATIONS		○	○	○	○	
FA2.0	FIRE ALARM PLAN - BASEMENT - SLC DEVICES		○	○	○	○	
FA2.1	FIRE ALARM PLAN - FIRST FLOOR - SLC DEVICES		○	○	○	○	
FA2.2	FIRE ALARM PLAN - SECOND FLOOR - SLC DEVICES		○	○	○	○	
FA2.3	FIRE ALARM PLAN - THIRD FLOOR - SLC DEVICES		○	○	○	○	
FA3.0	FIRE ALARM PLAN - BASEMENT - NAC DEVICES		○	○	○	○	
FA3.1	FIRE ALARM PLAN - FIRST FLOOR - NAC DEVICES		○	○	○	○	
FA3.2	FIRE ALARM PLAN - SECOND FLOOR - NAC DEVICES		○	○	○	○	
FA3.3	FIRE ALARM PLAN - THIRD FLOOR - NAC DEVICES		○	○	○	○	
FA4.0	FIRE ALARM RISER & DETAILS				○	○	●
SECURITY							
SC1.0	SECURITY SYMBOLS, DETAILS, NOTES & ABBREVIATIONS (REMOVED FROM SET 10-22-19)						
SC2.0	SECURITY PLAN - BASEMENT		○	○	○	○	
SC2.1	SECURITY PLAN - FIRST FLOOR		○	○	○	○	
SC2.2	SECURITY PLAN - SECOND FLOOR		○	○	○	○	
SC2.3	SECURITY PLAN - THIRD FLOOR		○	○	○	○	
SC3.0	SECURITY RISER DIAGRAM & DETAILS (REMOVED FROM SET 10-22-19)		○	○	○		●
SC3.1	SECURITY ONE LINE DIAGRAM (REMOVED FROM SET 10-22-19)		○	○	○		

REQUIREMENTS

CONTRACT #:

ELECTRICAL CONTRACTOR#: B-045C OF 2018/19

LOCATION MAPS

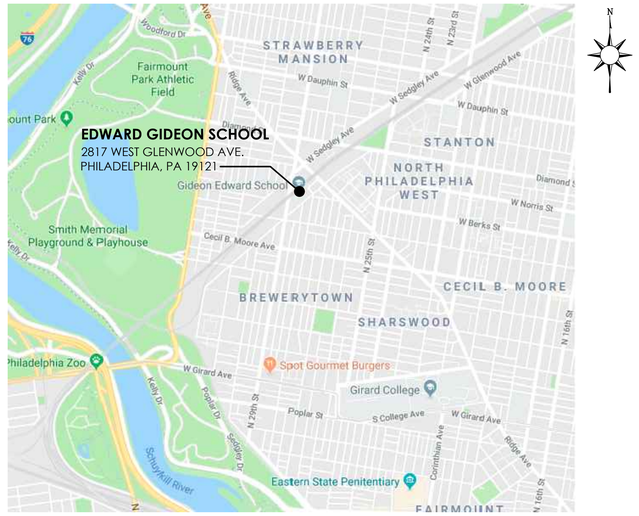

AREA PLAN
Scale: None

ENLARGED PLAN
Scale: None

THE SCHOOL DISTRICT OF PHILADELPHIA
OFFICE OF CAPITAL PROGRAMS
440 NORTH BROAD STREET
PHILADELPHIA, PA 19130 - 4015
(215) 400 - 4730 | (215) 400 - 4731 (fax)
www.phillasd.org

SEAL:

NAME (LICENSED PROFESSIONAL): PETE BONNES
STATE AND LICENSE NO: PA 046114E
DATE 09/30/2020

FXB PARTNERSHIPS THROUGH ENGINEERING
5 Christy Drive, Suite 307
Chadds Ford, PA 19317
610.558.3464 office
www.fxbinc.com
Engineering Excellence Since 1968

CONTRACT #'S
B-045C OF 2018/19 (ELECTRICAL CONTRACTOR)

NO.	DATE	REVISION
1	01.08.21	ISSUE FOR ADDENDUM #06
0	06.26.20	ISSUE FOR BID
D	08.30.19	ISSUE FOR 100% REVIEW
C	06.28.19	ISSUE FOR 90% REVIEW
B	04.26.19	ISSUE FOR 60% REVIEW
A	02.22.19	ISSUE FOR 25% REVIEW

SCHOOL & LOCATION
EDWARD GIDEON SCHOOL
2817 WEST GLENWOOD AVE.
PHILADELPHIA, PA 19121

PROJECT TITLE
ELECTRICAL UPGRADES

DRAWING TITLE
COVER SHEET

DRAWN BY JMH
CHECKED BY PJB

DRAWING NO.
CS1.0

SHEET 01 OF 45

ROOM NAME LEGEND

ROOM NAME ——— INDICATES ROOM TYPE

* "101" ——— 1 (FLOOR LEVEL) – 01(ROOM NUMBER)

* ROOM NUMBERS ARE DIAGRAMMATIC AND ARE SHOWN FOR REFERENCE ONLY AND DESIGN INTENT. EXISTING ROOM #'S ARE TO BE VERIFIED IN FIELD.

POWER DEMOLITION GENERAL NOTES

1. ALL DEVICES AND EQUIPMENT IN THIS FACILITY ARE EXISTING TO REMAIN UNLESS NOTED OTHERWISE.
2. FIELD VERIFY ALL DEVICES AND EQUIPMENT WHICH ARE FED FROM PANELS SHOWN TO BE REMOVED. PROVIDE NEW SURFACE MOUNTED BRANCH CIRCUITS TO EQUIPMENT FROM NEW PANELS INSTALLED DURING CONSTRUCTION.
3. PRIOR TO COMMENCEMENT OF DEMOLITION, IDENTIFY POWER SOURCE OF ALL 2, 3, AND 4–POLE DEVICES AND EQUIPMENT THAT ARE NOT SCHEDULED FOR DEMOLITION. CONFIRM THAT DEVICES WILL BE RE–SUPPLIED BY INDICATED NEW DISTRIBUTION EQUIPMENT BEFORE PROCEEDING WITH DEMOLITION. NOTIFY THIS ENGINEER IN WRITING OF ANY DISCREPANCIES.
4. THE CONTRACTOR SHALL COORDINATE ALL SHUTDOWN PROCEDURES WITH THE SCHOOL DISTRICT OF PHILADELPHIA CONSTRUCTION DEPARTMENT PRIOR TO SHUTDOWN OR DISCONNECTING ANY CIRCUITS.
5. ALL EQUIPMENT BEING REMOVED SHALL BE DISPOSED OF BY CONTRACTOR.
   A. EXISTING SURVEILLANCE CAMERAS, HEAD–END EQUIPMENT, AND SIMILAR SURVEILLANCE EQUIPMENT BEING REMOVED SHALL BE CAREFULLY REMOVED AND TURNED OVER TO THE SCHOOL DISTRICT OF PHILADELPHIA OFFICE OF SCHOOL SAFETY. ALL EQUIPMENT NOT DESIRED BY THE OFFICE OF SCHOOL SAFETY SHALL BE DISPOSED OF BY THE ELECTRICAL CONTRACTOR IN ACCORDANCE WITH LOCAL, STATE, AND FEDERAL DISPOSAL REQUIREMENTS.
   B. CONTRACTOR MUST CONFIRM DISPOSAL OF ALL EQUIPMENT WITH THE SCHOOL DISTRICT OF PHILADELPHIA CONSTRUCTION DEPARTMENT.
8. EXISTING FIRE ALARM SYSTEM AND ALL ASSOCIATED DEVICES, CABLE, CONDUIT, AND MISCELLANEOUS APPURTENANCES SHALL BE REMOVED IN THEIR ENTIRETY. NEW FIRE ALARM SYSTEM SHALL BE INSTALLED DURING CONSTRUCTION. CONTRACTOR MUST KEEP EXISTING FIRE ALARM SYSTEM IN PLACE AND OPERATIONAL UNTIL NEW SYSTEM IS FULLY INSTALLED, INSPECTED, COMMISSIONED, AND FULLY OPERATIONAL. ONCE NEW SYSTEM IS COMPLETE, CONTRACTOR SHALL REMOVE EXISTING FIRE ALARM SYSTEM.
9. EXISTING SECURITY SYSTEM AND ALL ASSOCIATED DEVICES, CABLE, CONDUIT, AND MISCELLANEOUS APPURTENANCES SHALL BE REMOVED IN THEIR ENTIRETY. NEW SECURITY SYSTEM SHALL BE INSTALLED DURING CONSTRUCTION. CONTRACTOR MUST KEEP EXISTING SECURITY SYSTEM IN PLACE AND OPERATIONAL UNTIL NEW SYSTEM IS FULLY INSTALLED, INSPECTED, COMMISSIONED, AND FULLY OPERATIONAL. ONCE NEW SYSTEM IS COMPLETE, CONTRACTOR SHALL REMOVE EXISTING SECURITY SYSTEM. DEVICES SHALL BE CAREFULLY REMOVED, STORED, AND TURNED OVER TO THE SDP OFFICE OF SCHOOL SECURITY.
10. CONTRACTOR MUST COORDINATE AND CONFIRM REMOVAL OF ALL WALL PHONES AND SPEAKERS INDICATED TO BE REMOVED WITH THE PHILADELPHIA SCHOOL DISTRICT'S CONSTRUCTION MANAGEMENT DEPARTMENT. CONTRACTOR SHALL ENSURE NO OPERATIONAL WALL PHONES OR SPEAKERS ARE REMOVED. SEE DRAWING ED4.0 FOR IMAGES OF WALL PHONES AND SPEAKERS TO BE REMOVED.
11. ALL DATA DEVICES ARE EXISTING TO REMAIN AND ARE SHOWN FOR REFERENCE ONLY UNLESS NOTED OTHERWISE.
12. CONTRACTOR SHALL CUT, CAP, MAKE SAFE AND ABANDON IN PLACE ANY CONDUITS IN CONCRETE/MASONRY WALLS OR SLABS WHICH SERVE EQUIPMENT BEING REMOVED. ALL OTHER CONDUITS AND RACEWAY SERVING EQUIPMENT BEING REMOVED SHALL BE REMOVED IN THEIR ENTIRETY.
13. PROVIDE BLANK STEEL FACEPLATE, SECURELY FASTENED IN PLACE, AND PAINTED TO MATCH ADJACENT INTERIOR FINISH COLOR FOR RECESSED OUTLETS THAT BECOME ABANDONED IN THIS PROJECT.
14. CONTRACTOR SHALL PATCH & REPAIR ANY DUCTWORK DAMAGED FROM DEMOLITION SCOPE OF WORK.
15. (E) – EXISTING TO REMAIN / (R) – EXISTING TO BE REMOVED

POWER DEMOLITION KEYED NOTES (#)

1. EXISTING PANEL AND BRANCH CIRCUITS SHALL REMAIN. DEMOLISH THE FEEDER FOR THE INDICATED PANEL TO SOURCE, INCLUDING ALL ASSOCIATED APPURTENANCES.
2. REMOVE SURFACE MOUNTED SWITCH, RECEPTACLE AND CIRCUIT COMPLETE FOR WINDOW AC UNIT. NEW SURFACE MOUNTED RECEPTACLE, SWITCH, AND CIRCUIT SHALL BE INSTALLED DURING CONSTRUCTION. CONFIRM RECEPTACLE AND CIRCUIT REQUIREMENTS WITH AC UNIT NAMEPLATE. MOUNTING HEIGHTS TO MATCH EXISTING.
3. EXISTING CEILING MOUNTED RECEPTACLE SHALL BE REMOVED IN ITS ENTIRETY AND REPLACED WITH NEW CEILING MOUNTED RECEPTACLE DURING CONSTRUCTION. CONTRACTOR MUST REMOVE ALL ASSOCIATED CABLE, CONDUIT, WIREMOLD AND ALL ASSOCIATED MISCELLANEOUS APPURTENANCES. CONTRACTOR MUST CONFIRM NEW RECEPTACLE TYPE AND REQUIREMENTS WITH EXISTING RECEPTACLE TYPE PRIOR TO REMOVAL. NEW RECEPTACLE INSTALLED DURING CONSTRUCTION SHALL MATCH EXISTING.
4. EXISTING WALL PHONE TO BE REMOVED IN ITS ENTIRETY. CONTRACTOR SHALL REMOVE ALL ASSOCIATED MOUNTING HARDWARE, CABLES, CONDUIT AND ALL ASSOCIATED MISCELLANEOUS APPURTENANCES IN THEIR ENTIRETY. SEE DRAWING ED5.0 FOR IMAGE OF EXISTING WALL PHONE TYPE TO BE REMOVED. CONTRACTOR MUST CONFIRM REMOVAL OF WALL PHONE WITH THE SCHOOL DISTRICT OF PHILADELPHIA CONSTRUCTION MANAGEMENT DEPARTMENT TO ENSURE NO OPERATIONAL OR IN–USE PHONES ARE REMOVED.
5. EXISTING SPEAKER TO BE REMOVED IN ITS ENTIRETY. CONTRACTOR SHALL REMOVE ALL ASSOCIATED MOUNTING HARDWARE, CABLES, CONDUIT AND ALL ASSOCIATED MISCELLANEOUS APPURTENANCES IN THEIR ENTIRETY. SEE DRAWING ED5.0 FOR IMAGE OF EXISTING SPEAKER TYPE TO BE REMOVED. CONTRACTOR MUST CONFIRM REMOVAL OF SPEAKER WITH THE SCHOOL DISTRICT OF PHILADELPHIA CONSTRUCTION MANAGEMENT DEPARTMENT TO ENSURE NO OPERATIONAL OR IN–USE SPEAKERS ARE REMOVED.
6. EXISTING POWER POLE TO REMAIN. CONTRACTOR SHALL REMOVE POWER BRANCH CIRCUIT(S) BACK TO SOURCE PANEL FOR REPLACEMENT DURING CONSTRUCTION. CONTRACTOR SHALL REMOVE ALL ASSOCIATED BRANCH CIRCUIT CABLE, CONDUIT, WIREMOLD AND ALL MISCELLANEOUS ASSOCIATED APPURTENANCES. ALL RECEPTACLES IN POWER POLE ARE EXISTING TO REMAIN AND SHALL BE RE–FED BY NEW BRANCH CIRCUIT(S) INSTALLED DURING CONSTRUCTION. ALL DATA DEVICES AND DATA CABLING ASSOCIATED WITH POWER POLE ARE EXISTING TO REMAIN.
7. EXISTING CLOCK TO BE REMOVED IN ITS ENTIRETY. CLOCK SHALL BE REPLACED WITH NEW WIRELESS CLOCK DURING CONSTRUCTION.
8. DEMOLISH INDICATED PANEL AND FEEDER TO SOURCE, INCLUDING ALL ASSOCIATED APPURTENANCES. IDENTIFY, TAG, SAFE–OFF AND RETAIN ALL BRANCH CIRCUITS FED FROM THIS PANEL, EXCEPT CIRCUITS IDENTIFIED FOR DEMOLITION. RECORD CIRCUIT NUMBER, CIRCUIT SIZE, AND CIRCUIT BREAKER SIZE. RE–FEED BRANCH CIRCUITS AS INDICATED ON NEW WORK PLANS.
9. RETAIN PANEL BACKBOX FOR USE AS A SPLICE BOX FOR BRANCH CIRCUIT CONDUCTORS. RE–FEED BRANCH CIRCUITS AS INDICATED ON NEW WORK PLANS.
10. DEMOLISH INDICATED SAFETY SWITCH AND FEEDER TO SOURCE, INCLUDING ALL ASSOCIATED APPURTENANCES. IDENTIFY, TAG, SAFE–OFF AND RETAIN LOAD–SIDE CIRCUIT FED FROM THIS SWITCH. RE–FEED AS INDICATED ON NEW WORK 1–LINE DIAGRAM.
11. INDICATED SAFETY SWITCH IS ESTIMATED TO SUPPLY A PANELBOARD THAT IS INTENDED TO BE DEMOLISHED. FIELD VERIFY PRIOR TO COMMENCEMENT OF DEMOLITION. NOTIFY THIS ENGINEER IN WRITING IF THE SWITCH DOES NOT SUPPLY A PANELBOARD TO BE DEMOLISHED, AND DO NOT PROCEED WITH DEMOLITION.
12. LOCATION OF EXISTING HOUSE FAN TO REMAIN IN SERVICE. PRIOR TO COMMENCEMENT OF DEMOLITION, IDENTIFY POWER SOURCE. CONFIRM THAT FAN WILL BE RE–SUPPLIED BY INDICATED NEW DISTRIBUTION EQUIPMENT BEFORE PROCEEDING WITH DEMOLITION. NOTIFY THIS ENGINEER IN WRITING OF ANY DISCREPANCIES.

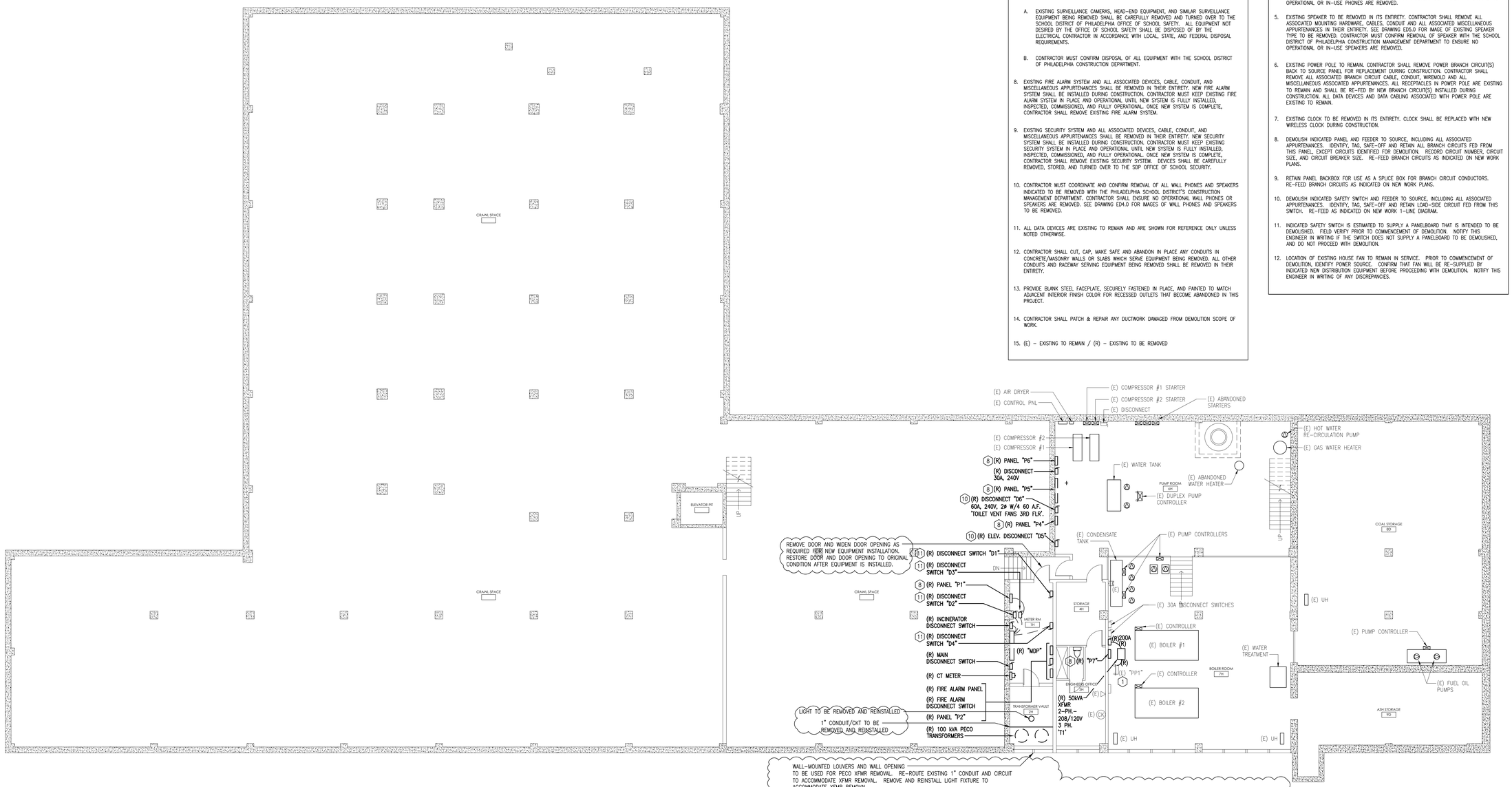

1 / ED2.0 ELECTRICAL DEMOLITION POWER PLAN - BASEMENT

SCALE: 1/8"=1'-0"

PECO XFMR REMOVAL

1. E.C. SHALL REMOVE THE WALL–MOUNTED VENTILATION LOUVER SYSTEM AND INCREASE THE WALL OPENING HEIGHT IF REQUIRED BY PECO FOR XFMR REMOVAL.
2. EXCAVATE AND INCREASE BELOW–GRADE WALL OPENING TO INCREASE OPENING HEIGHT.
3. WALL OPENING HEIGHT SHALL BE DETERMINED BY PECO DURING CONSTRUCTION.
4. PECO SHALL PROVIDE OIL CONTAINMENT MEASURES IN THE VAULT, DRAIN XFMR OIL, AND REMOVE THE XFMR'S AND OIL FROM THE VAULT THROUGH THE WALL OPENING.
5. PECO SHALL TRANSPORT AND DISPOSE OF THE XFMR'S AND OIL.
6. E.C. SHALL RESTORE THE WALL OPENING TO THE ORIGINAL DIMENSIONS AND CONDITION THAT EXISTED PRIOR TO MODIFICATIONS MADE FOR XFMR REMOVAL. THIS SHALL INCLUDE A NEW SCREENED WALL LOUVER, MOUNTING FRAME, AND RESTORATION OF GRADE CONDITION AND LANDSCAPING.
7. PRIOR TO COMMENCEMENT OF XFMR REMOVAL, SCHEDULE A MEETING WITH PECO AND THIS ENGINEER TO DETERMINE IF PECO REQUIRES THE WALL OPENING TO BE ENLARGED, AND IF SO, TO DETERMINE THE MEANS AND METHODS TO BE USED.

BID PRICE LINE ITEM FOR WALL MODIFICATIONS FOR XFMR REMOVAL

1. PER COORDINATION MEETINGS WITH PECO DURING THE DESIGN PROCESS, PECO WILL DETERMINE IF THE EXISTING WALL OPENING NEEDS TO BE ENLARGED FOR TRANSFORMER REMOVAL. THIS DETERMINATION WILL BE MADE BY THE PECO TEAM RESPONSIBLE FOR REMOVING THE TRANSFORMERS AND WILL OCCUR WHEN THE ELECTRICAL CONTRACTOR IS READY TO REMOVE THE TRANSFORMERS.
2. BID PRICE SHALL INCLUDE A $10,000 LINE–ITEM ALLOWANCE FOR THE MATERIAL AND LABOR COSTS REQUIRED TO ENLARGE THE WALL OPENING AND TO RESTORE IT, IF REQUIRED BY PECO FOR TRANSFORMER REMOVAL.
3. THIS LINE–ITEM WORK SHALL ONLY BE APPROVED BY SDP IF PECO DETERMINES THAT THE WALL OPENING REQUIRES MODIFICATION FOR TRANSFORMER REMOVAL.
4. NOTE: ALL ELECTRICAL MATERIALS AND LABOR FOR THE PROJECT SHALL BE INCLUDED IN THE BASE BID. THIS INCLUDES ALL PECO COORDINATION, ELECTRICAL SERVICE WORK, TEMPORARY MEANS AND METHODS TO MAINTAIN ELECTRICAL POWER TO ALL AREAS OF THE BUILDING DURING CONSTRUCTION, THE NEW PAD MOUNTED XFMR VAULT AND THE EXTERIOR FIRE–RATED XFMR WALL WORK. IT ALSO INCLUDES ALL MATERIALS AND LABOR REQUIRED BY THE ELECTRICAL CONTRACTOR RELATED TO TRANSFORMER REMOVAL ASSUMING THAT PECO DOES NOT REQUIRE THE WALL OPENING TO BE MODIFIED IN ORDER TO REMOVE THE TRANSFORMERS.

THE SCHOOL DISTRICT OF PHILADELPHIA

OFFICE OF CAPITAL PROGRAMS

440 NORTH BROAD STREET
PHILADELPHIA, PA 19130 - 4015
(215) 400 - 4730 | (215) 400 - 4731 (fax)
www.philasd.org

SEAL:

NAME (LICENSED PROFESSIONAL): PETE BONNES
STATE AND LICENSE NO: PA 046114E
DATE 09/30/2020

FXB PARTNERSHIPS THROUGH ENGINEERING
5 Christy Drive, Suite 307
Chadds Ford, PA 19317
610.558.3464 office
www.fxbinc.com
Engineering Excellence Since 1968

CONTRACT #'S
B-045C OF 2018/19 (ELECTRICAL CONTRACTOR)

NO.	DATE	REVISION
1	01.08.21	ISSUE FOR ADDENDUM #06
0	06.26.20	ISSUE FOR BID
D	08.30.19	ISSUE FOR 100% REVIEW
C	06.28.19	ISSUE FOR 90% REVIEW
B	04.26.19	ISSUE FOR 60% REVIEW
A	02.22.19	ISSUE FOR 25% REVIEW

SCHOOL & LOCATION

EDWARD GIDEON SCHOOL

2817 WEST GLENWOOD AVE.
PHILADELPHIA, PA 19121

PROJECT TITLE

ELECTRICAL UPGRADES

DRAWING TITLE

ELECTRICAL DEMOLITION POWER PLAN - BASEMENT

DRAWN BY JMH | CHECKED BY PJB

DRAWING NO. ED2.0

SHEET 07 OF 45

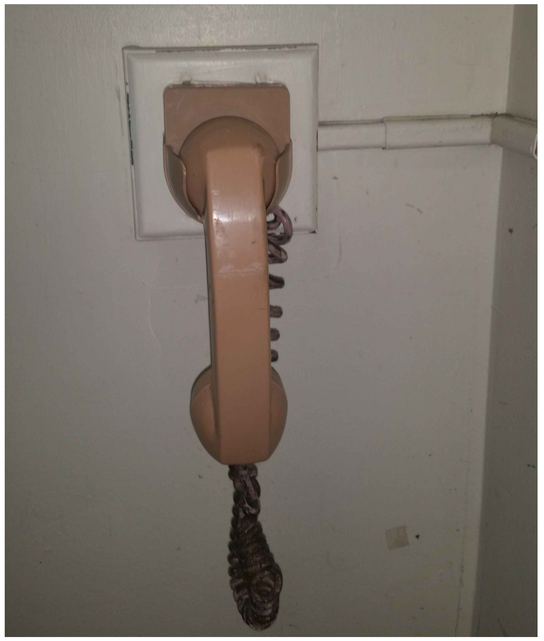

EXISTING WALL PHONE TYPE TO BE REMOVED

EXISTING SPEAKER TYPE TO BE REMOVED

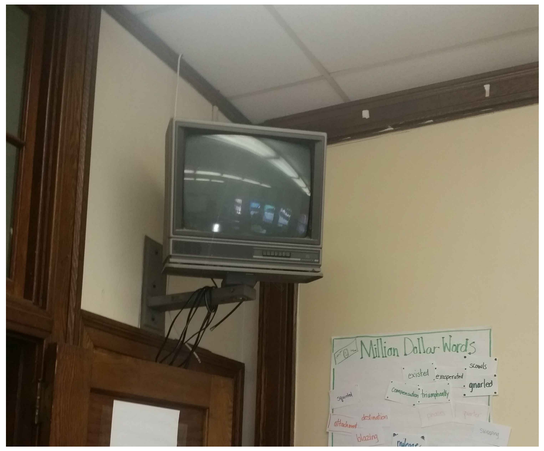

EXISTING TV TYPE AND ASSOCIATED MOUNTING BRACKETS AND HARDWARE TO BE REMOVED

CONTRACTOR MUST CONFIRM REMOVAL OF ALL TV'S, WALL PHONES, AND SPEAKERS INDICATED TO BE REMOVED ON PLANS AND ABOVE WITH SDP. CONTRACTOR MUST ENSURE NO FUNCTIONING IN-USE EQUIPMENT IS REMOVED.

THE SCHOOL DISTRICT OF PHILADELPHIA

OFFICE OF CAPITAL PROGRAMS

440 NORTH BROAD STREET
PHILADELPHIA, PA 19130 - 4015

(215) 400 - 4730 | (215) 400 - 4731 (fax)
www.phila.sd.org

SEAL:

NAME (LICENSED PROFESSIONAL): PETE BONNES
STATE AND LICENSE NO: PA 046114E
DATE 09/30/2020

FXB PARTNERSHIPS THROUGH ENGINEERING

5 Christy Drive, Suite 307
Chadds Ford, PA 19317
610.558.3464 office
www.fxbinc.com

Engineering Excellence Since 1968

CONTRACT #'S
B-045C OF 2018/19 (ELECTRICAL CONTRACTOR)

NO.	DATE	REVISION
1	01.08.21	ISSUE FOR ADDENDUM #06
0	06.26.20	ISSUE FOR BID
D	08.30.19	ISSUE FOR 100% REVIEW
C	06.28.19	ISSUE FOR 90% REVIEW
B	04.26.19	ISSUE FOR 60% REVIEW
A	02.22.19	ISSUE FOR 25% REVIEW

SCHOOL & LOCATION

EDWARD GIDEON SCHOOL

2817 WEST GLENWOOD AVE.
PHILADELPHIA, PA 19121

PROJECT TITLE

ELECTRICAL UPGRADES

DRAWING TITLE

EXISTING CONDITION PHOTOS

DRAWN BY	CHECKED BY
JMH	PJB

DRAWING NO.

ED4.0

SHEET 11 OF 45

ROOM NAME LEGEND

ROOM NAME ——— INDICATES ROOM TYPE

* "101" ——— 1 (FLOOR LEVEL) – 01(ROOM NUMBER)

* ROOM NUMBERS ARE DIAGRAMMATIC AND ARE SHOWN FOR REFERENCE ONLY AND DESIGN INTENT. EXISTING ROOM #'S ARE TO BE VERIFIED IN FIELD.

POWER GENERAL NOTES

1. ALL SHOWN IS NEW AND BY CONTRACTOR UNLESS NOTED OTHERWISE.
2. INDICATED WIRING IS DIAGRAMMATIC IN NATURE AND ONLY INTENDED TO CONVEY CIRCUITING INTENT.
3. COORDINATE CONDUIT ROUTING WITH EXISTING DUCTWORK, PIPING, STRUCTURAL COMPONENTS, FIRE ALARM COMPONENTS, TELE/DATA EQUIPMENT, AND SIMILAR BUILDING SYSTEMS. THIS INCLUDES THE FOLLOWING, AS REQUIRED TO PERFORM THE INDICATED WORK:
   - 3.1. RELOCATION OR TEMPORARY REMOVAL AND REINSTALLATION OF THESE BUILDING SYSTEMS.
   - 3.2. ROUTING CONDUIT, CIRCUITS, AND FEEDERS AROUND THESE BUILDING SYSTEMS.
4. CONFIRM EQUIPMENT POWER REQUIREMENTS WITH EQUIPMENT NAMEPLATES AND/OR APPROVED EQUIPMENT SUBMITTALS PRIOR TO CONSTRUCTION.
5. CONFIRM ALL DEVICE MOUNTING HEIGHTS AND EXISTING CONDITIONS PRIOR TO INSTALLATION.
6. NEC 110.26 REQUIRED CLEARANCES SHALL BE MAINTAINED FOR EXISTING AND NEW ELECTRICAL EQUIPMENT INSTALLED DURING CONSTRUCTION.
7. NEW RECEPTACLES SHALL BE SURFACE MOUNTED AND FED BY SURFACE MOUNTED BRANCH CIRCUITS IN CONDUIT. PROVIDE ALL NECESSARY HARDWARE, BACK BOXES, FACEPLATES AND ANY OTHER APPURTENANCES FOR A FULLY FUNCTIONAL INSTALLATION.

POWER KEYED NOTES

1. RE-FEED EXISTING BRANCH CIRCUITS RETAINED FROM INDICATED DEMOLISHED PANEL FROM THIS PANEL. INTERCEPT RETAINED BRANCH CIRCUITS AND ROUTE INTO NEW SPLICE ENCLOSURE IN AREA OF DEMOLISHED PANELBOARD LOCATION. RE-FEED FROM THIS PANEL WITH LIKE-SIZED CONDUCTORS AND CIRCUIT BREAKERS, AS CONFIRMED DURING DEMOLITION. PROVIDE SPLICES IN SPLICE ENCLOSURE. NOTE: E.C. SHALL CLEARLY IDENTIFY LOAD SERVED, CIRCUIT BREAKER SIZES, AND QUANTITIES ON PANEL SUBMITTALS TO INDICATE THE CIRCUIT BREAKERS THAT WILL BE PROVIDED TO RE-FEED EXISTING CIRCUITS. THIS DETERMINATION SHALL BE BASED ON THE E.C.'S FIELD VERIFICATION OF THESE LOADS, CIRCUIT SIZES, AND CIRCUIT BREAKER SIZES.
2. FIELD COORDINATE DEVICE LOCATION AND MOUNTING HEIGHT.
3. NEW SURFACE MOUNTED SWITCH AND RECEPTACLE FOR WINDOW AC UNIT. NEW RECEPTACLE INSTALLED DURING CONSTRUCTION MUST MATCH EXISTING REMOVED DURING DEMOLITION. CONTRACTOR MUST CONFIRM NEMA CONFIGURATION OF RECEPTACLE PRIOR TO PURCHASE AND INSTALLATION. MOUNT SWITCH AT SAME HEIGHT AS EXISTING SWITCH REMOVED DURING DEMOLITION.
4. NEW CEILING MOUNTED RECEPTACLE. NEW RECEPTACLE INSTALLED DURING CONSTRUCTION MUST MATCH EXISTING REMOVED DURING DEMOLITION. CONTRACTOR MUST CONFIRM NEMA CONFIGURATION OF RECEPTACLE PRIOR TO PURCHASE AND INSTALLATION.
5. EXISTING POWER POLE KEPT SAFE DURING DEMOLITION. ALL RECEPTACLES IN POWER POLE ARE EXISTING KEPT SAFE FROM DEMOLITION AND SHALL BE RE-FED BY NEW BRANCH CIRCUIT(S) INDICATED. ALL DATA DEVICES AND DATA CABLING ASSOCIATED WITH POWER POLE ARE EXISTING TO REMAIN AS-IS.
6. RE-FEED EXISTING BRANCH CIRCUITS RETAINED FROM INDICATED DEMOLISHED PANEL FROM THIS PANEL. RE-FEED WITH LIKE-SIZED CONDUCTORS AND CIRCUIT BREAKERS, AS CONFIRMED DURING DEMOLITION. PROVIDE SPLICES IN DEMOLISHED PANEL BACKBOX THAT WAS SALVAGED DURING DEMOLITION. NOTE: E.C. SHALL CLEARLY IDENTIFY THE LOAD SERVED, CIRCUIT BREAKER SIZES AND QUANTITIES ON PANEL SUBMITTALS TO INDICATE THE CIRCUIT BREAKERS THAT WILL BE PROVIDED TO RE-FEED EXISTING CIRCUITS. THIS DETERMINATION SHALL BE BASED ON THE E.C.'S FIELD VERIFICATION OF THESE LOADS, CIRCUIT SIZES, AND CIRCUIT BREAKER SIZES.
7. ELECTRICAL PANEL WORKING CLEARANCE. THIS AREA SHALL BE KEPT CLEAR AND MAINTAINED FOR CODE REQUIRED WORKING CLEARANCE. THIS AREA SHALL NOT BE USED FOR STORAGE.
8. RE-FEED EXISTING BRANCH CIRCUITS RETAINED FROM INDICATED DEMOLISHED PANEL FROM THIS PANEL. RE-FEED WITH LIKE-SIZED CONDUCTORS AND CIRCUIT BREAKERS, AS CONFIRMED DURING DEMOLITION. NOTE: E.C. SHALL CLEARLY IDENTIFY CIRCUIT BREAKER SIZES AND QUANTITIES ON PANEL SUBMITTALS TO INDICATE THE CIRCUIT BREAKERS THAT WILL BE PROVIDED TO RE-FEED EXISTING CIRCUITS. THIS DETERMINATION SHALL BE BASED ON THE E.C.'S FIELD VERIFICATION OF THESE LOADS, CIRCUIT SIZES, AND CIRCUIT BREAKER SIZES.

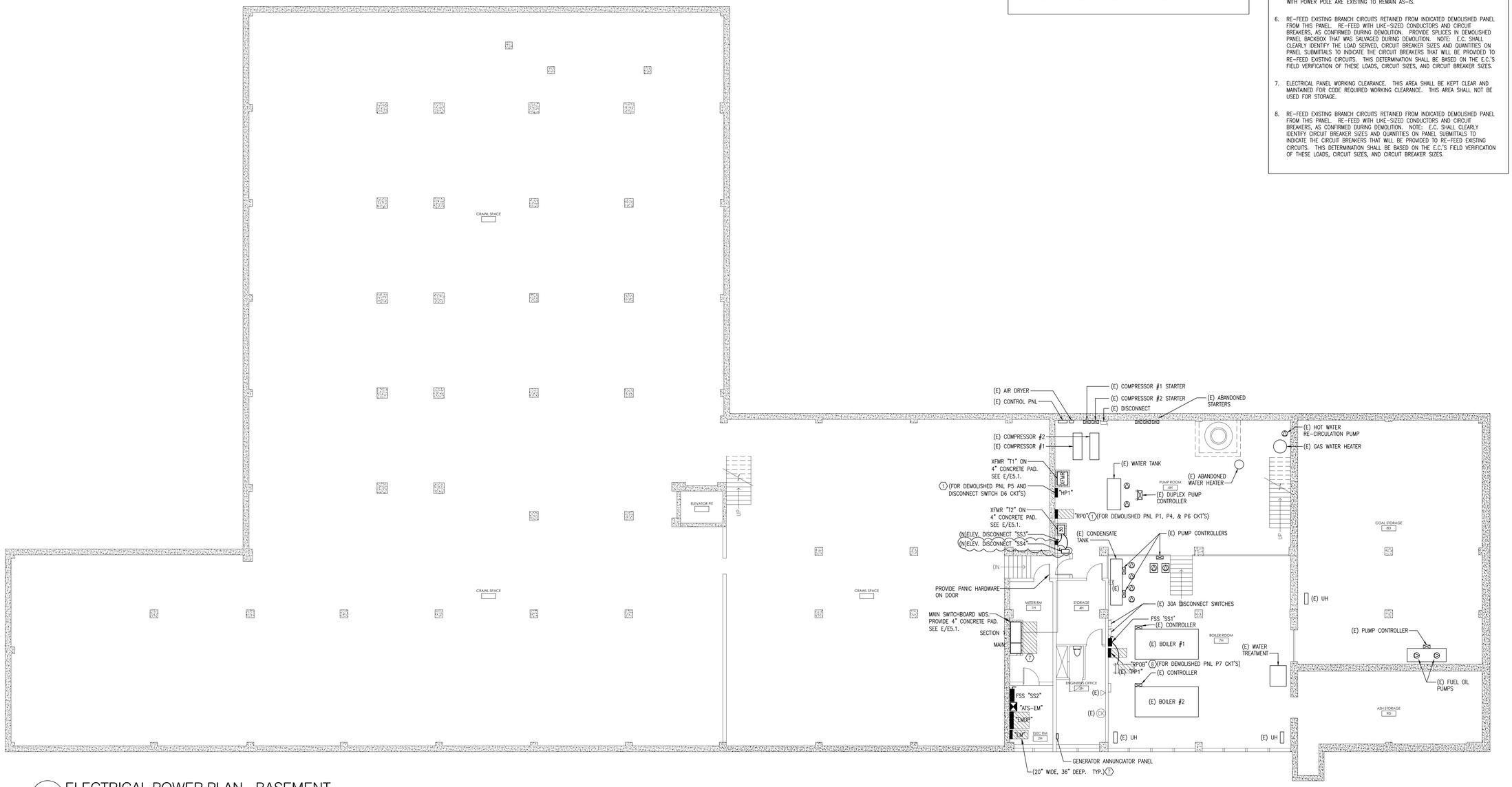

1 / E3.0 ELECTRICAL POWER PLAN - BASEMENT

SCALE: 1/8"=1'-0"

THE SCHOOL DISTRICT OF PHILADELPHIA

OFFICE OF CAPITAL PROGRAMS

440 NORTH BROAD STREET
PHILADELPHIA, PA 19130 - 4015

(215) 400 - 4730 | (215) 400 - 4731 (fax)
www.philasd.org

SEAL:

NAME (LICENSED PROFESSIONAL): PETE BONNES
STATE AND LICENSE NO: PA 046114E
DATE 09/30/2020

FXB PARTNERSHIPS THROUGH ENGINEERING

5 Christy Drive, Suite 307
Chadds Ford, PA 19317
610.558.3464 office
www.fxbinc.com

Engineering Excellence Since 1968

CONTRACT #'S
B-045C OF 2018/19 (ELECTRICAL CONTRACTOR)

NO.	DATE	REVISION
1	01.08.21	ISSUE FOR ADDENDUM #06
0	06.26.20	ISSUE FOR BID
D	08.30.19	ISSUE FOR 100% REVIEW
C	06.28.19	ISSUE FOR 90% REVIEW
B	04.26.19	ISSUE FOR 60% REVIEW
A	02.22.19	ISSUE FOR 25% REVIEW

SCHOOL & LOCATION

EDWARD GIDEON SCHOOL

2817 WEST GLENWOOD AVE.
PHILADELPHIA, PA 19121

PROJECT TITLE

ELECTRICAL UPGRADES

DRAWING TITLE

ELECTRICAL POWER PLAN
BASEMENT

DRAWN BY	CHECKED BY
JMH	PJB

DRAWING NO.

E3.0

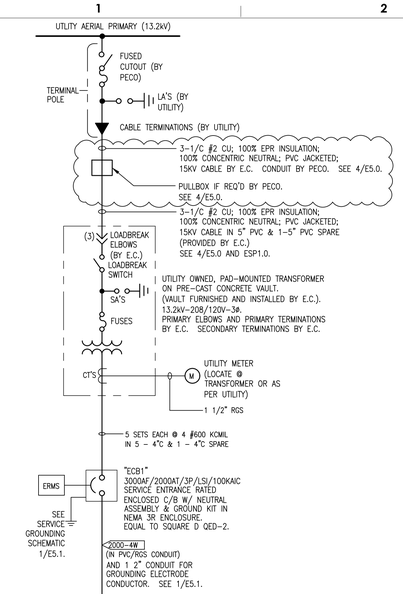

ELECTRICAL SERVICE LOAD SUMMARY

DESCRIPTION	CONNECTED LOAD (kVA)		MULTIPLIER	N.E.C. LOAD (kVA)	
INTERIOR LIGHTING	31.00	kVA	1.25	38.75	kVA
EXTERIOR LIGHTING	1.10	kVA	1.25	1.38	kVA
AIR CONDITIONING	45.90	kVA	1.00	45.90	kVA
VENTILATION	0.00	kVA	1.00	0.00	kVA
RECEPTACLES	58.60	kVA		34.30	kVA
ELEVATOR	9.99	kVA	1.00	9.99	kVA
KITCHEN EQUIPMENT	22.38	kVA	0.65	14.55	kVA
REFRIGERATION EQUIPMENT	0.00	kVA	1.00	0.00	kVA
MISC. LOADS @100%	321.32	kVA	1.00	321.32	kVA
LARGEST MOTOR	0.00	kVA	0.25	0.00	kVA
TOTAL LOAD	**490.29**	**kVA**		**466.18**	**kVA**
TOTAL AMPS @208Y/120V, 3-PHASE	**1360.9**	**A**		**1294.0**	**A**
VA PER FT² CALCUATION:	**67000**	**FT²/**	**466182 VA=**	**7.0**	**W/FT²**

GENERAL NOTES

1. ALL INDICATED IS NEW UNLESS NOTED OTHERWISE.
2. EXACT LOCATION OF UTILITY TRANSFORMER & METER MUST BE APPROVED BY UTILITY AND GC AND/OR CONSTRUCTION MANAGER AND OWNERS PROJECT MANAGER.
3. UTILITY TRANSFORMER ELBOWS AND TERMINATIONS ARE FURNISHED & INSTALLED BY E.C. PROVIDE 200A, 15 KV CLASS 3ø LOADBREAK ELBOW CONNECTOR: ELASTIMOLD OR COOPER POWER SYSTEMS WITH CONCENTRIC NEUTRAL JACKET SEAL & TEST POINT. CONNECTOR MUST BE APPROVED BY UTILITY AND THIS ENGINEER. PROVIDE SECONDARY TERMINATIONS TO UTILITY SPADE TERMINALS USING UTILITY APPROVED DOUBLE BARREL COMPRESSION TYPE LUGS, BURNDY OR EQUAL. LUGS MUST BE APPROVED BY UTILITY AND THIS ENGINEER.
4. VERIFY PRIMARY VOLTAGE WITH UTILITY PRIOR TO ORDERING ANY EQUIPMENT, OR CABLE AND VERIFY CUSTOMER VS. UTILITY RESPONSIBILITIES PRIOR TO SUBMITTING BID. ALL CUSTOMER RESPONSIBILITIES SHALL BE INCLUDED IN E.C.'S BID (EXCLUDING UTILITY FEES FOR THEIR SERVICES).
5. VERIFY NAMEPLATE RATING OF HVAC EQUIPMENT, ELEVATOR AND OWNERS PROCESS EQUIPMENT (WHERE APPLICABLE) PRIOR TO ORDERING BREAKERS, DISCONNECTS, CABLES, AND PRIOR TO ROUGH-IN.
6. PROVIDE SUBMITTALS FOR ALL EQUIPMENT INDICATED ON THIS ONE LINE DIAGRAM. THIS INCLUDES PRIMARY & SECONDARY TERMINATIONS, SWITCHBOARDS, PANELBOARDS, TRANSFORMERS, DISCONNECTS, METER SOCKETS, AND PRIMARY CABLE.
7. CONTRACTOR SHALL CONTACT UTILITY AND ASSUME OWNERSHIP AND ALL COORDINATION OF NEW SERVICE AFTER AWARD OF CONTRACT.
8. RETAIN THE SERVICES OF A PENNSYLVANIA STATE LICENSED PROFESSIONAL ENGINEER TO PERFORM A POWER SYSTEMS STUDY (SHORT CIRCUIT, COORDINATION, ARC FLASH) AS INDICATED IN THE PROJECT WRITTEN SPECIFICATIONS.
9. INCREASE CONDUCTOR SIZE SHOWN BY ONE SIZE IF DISTANCE FROM SOURCE TO LOAD EXCEEDS THE FOLLOWING (THIS APPLIES TO ALL FEEDERS AND BRANCH CIRCUITS EVEN IF DRAWINGS INDICATE A STANDARD SIZE CONDUCTOR).

VOLTS	PHASE	ONE WAY CONDUCTOR DISTANCE (IN FEET) FROM BREAKER TO LOAD
120	1	70
208	1	100
277	1	140
480	1	200
208	3	130
480	3	250

10. THERE WILL BE A SHORT PERIOD OF TIME WHEN THE EXISTING ELECTRICAL SERVICE IS USED AS TEMPORARY SERVICE. BUILDING LOADS WILL BE MOVED FROM THE EXISTING SERVICE TO THE NEW SERVICE IN DAILY PHASES SO THE BUILDING REMAINS ENERGIZED DURING CONSTRUCTION. DURING THIS PERIOD, PROVIDE SIGNAGE AT EACH EXISTING AND NEW SERVICE DISCONNECT SWITCH IDENTIFYING THE NUMBER AND LOCATION OF ALL SERVICE DISCONNECT SWITCHES.

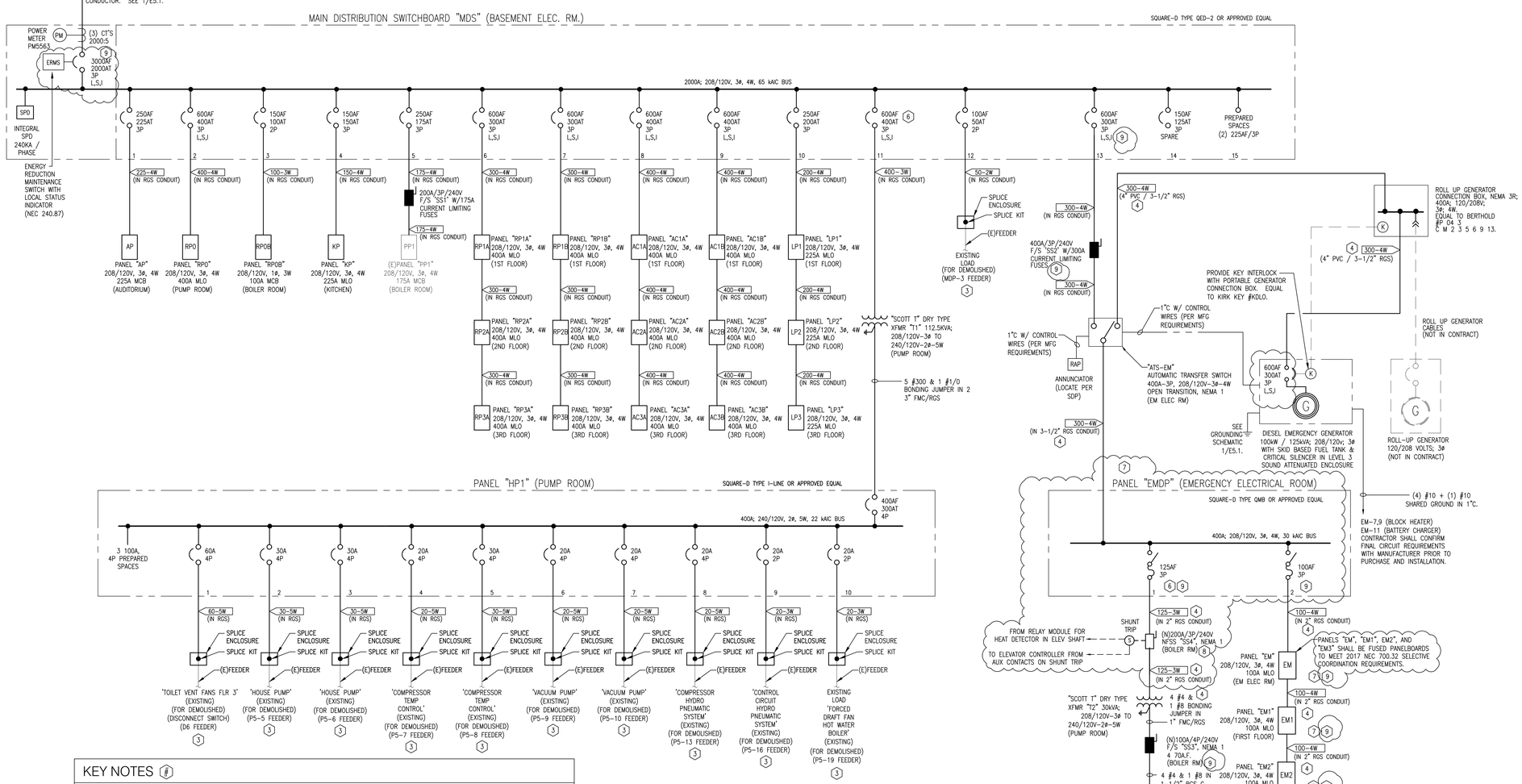

KEY NOTES

1. ESTIMATED SIZE. FIELD VERIFY PRIOR TO ORDERING MATERIALS OR COMMENCEMENT OF WORK.
2. FUSES TO MATCH EXISTING REMOVED DURING DEMOLITION.
3. EXISTING FEEDER RETAINED DURING DEMOLITION SHALL BE RE-FED FROM THIS PANEL. INTERCEPT RETAINED FEEDER AND ROUTE INTO NEW SPLICE ENCLOSURE. RE-FEED FROM THIS PANEL WITH LIKE-SIZED CONDUCTORS AND CIRCUIT BREAKER, AS CONFIRMED DURING DEMOLITION. PROVIDE SPLICES IN SPLICE ENCLOSURE. NOTE: E.C. SHALL CLEARLY IDENTIFY LOAD SERVED, CIRCUIT BREAKER SIZES, AND QUANTITIES ON PANEL SUBMITTALS TO INDICATE THE CIRCUIT BREAKERS THAT WILL BE PROVIDED TO RE-FEED EXISTING CIRCUITS. THIS DETERMINATION SHALL BE BASED ON THE E.C.'S FIELD VERIFICATION OF THESE LOADS, CIRCUIT SIZES, AND CIRCUIT BREAKER SIZES.
4. 2 HOUR FIRE RATED CABLE. INSTALL PER CABLE MFG REQUIREMENTS AND CONFIRM CONDUIT SIZE WITH CABLE MFG.
5. MATCH FEEDER SIZE RECORDED DURING DEMOLITION. ASSUME 60'-0" OF 2 #4 & 1 #8 GRD IN 1" RGS/FLEXIBLE METALLIC CONDUIT FOR BIDDING.
6. FACTORY INSTALLED FIXED HANDLE PAD LOCKING DEVICE. FIELD LABEL LOCATION OF LOCKING DEVICE ON TRANSFORMER SUPPLIED BY THIS CIRCUIT BREAKER.
7. PROVIDE INTEGRAL TYPE 2 SURGE PROTECTIVE DEVICE PER 2017 NEC 700.8.
8. SAFETY SWITCH WITH SHUNT TRIP FUNCTION FOR ELEVATOR SHUNT TRIP OPERATION.
9. OVERCURRENT PROTECTION DEVICE SHALL BE SELECTIVELY COORDINATED AS REQUIRED BY 2017 NEC 700.32. PROVIDE SUBMITTALS INDICATING COMPLETE SELECTIVE COORDINATION.

FEEDER SCHEDULE

FEEDER TAG <###-##W>	NUMBER OF CONDUITS	SIZE OF CONDUITS	QUANTITY AND SIZE OF CU CONDUCTORS PER CONDUIT
20-5W	1	3/4"	5 #12 AWG & 1 #12 GND
20-3W	1	3/4"	3 #12 AWG & 1 #12 GND
20-4W	1	3/4"	4 #12 AWG & 1 #12 GND
25-3W	1	3/4"	3 #10 AWG & 1 #10 GND
25-4W	1	3/4"	4 #10 AWG & 1 #10 GND
30-3W	1	3/4"	3 #10 AWG & 1 #10 GND
30-4W	1	3/4"	4 #10 AWG & 1 #10 GND
30-5W	1	3/4"	5 #10 AWG & 1 #10 GND
35-3W	1	3/4"	3 #8 AWG & 1 #10 GND
35-4W	1	3/4"	4 #8 AWG & 1 #10 GND
40-3W	1	3/4"	3 #8 AWG & 1 #10 GND
40-4W	1	3/4"	4 #8 AWG & 1 #10 GND
45-3W	1	1"	3 #6 AWG & 1 #10 GND
45-4W	1	1"	4 #6 AWG & 1 #10 GND
50-2W	1	1"	2 #6 AWG & 1 #10 GND
50-3W	1	1"	3 #6 AWG & 1 #10 GND
50-5W	1	1"	5 #6 AWG & 1 #10 GND
60-3W	1	1"	3 #6 AWG & 1 #10 GND
60-4W	1	1"	4 #6 AWG & 1 #10 GND
60-5W	1	1"	5 #6 AWG & 1 #10 GND
70-3W	1	1"	3 #4 AWG & 1 #8 GND
70-4W	1	1"	4 #4 AWG & 1 #8 GND
80-3W	1	1 1/4"	3 #3 AWG & 1 #8 GND
80-4W	1	1 1/4"	4 #3 AWG & 1 #8 GND
90-3W	1	1 1/4"	3 #3 AWG & 1 #8 GND
90-4W	1	1 1/4"	4 #3 AWG & 1 #8 GND
100-3W	1	1 1/2"	3 #2 AWG & 1 #8 GND
100-4W	1	1 1/2"	4 #2 AWG & 1 #8 GND
110-3W	1	1 1/2"	3 #1 AWG & 1 #6 GND
110-4W	1	1 1/2"	4 #1 AWG & 1 #6 GND
125-3W	1	2"	3 #1/0 AWG & 1 #6 GND
125-4W	1	2"	4 #1/0 AWG & 1 #6 GND
150-3W	1	2"	3 #1/0 AWG & 1 #6 GND
150-4W	1	2"	4 #1/0 AWG & 1 #6 GND
175-3W	1	2"	3 #2/0 AWG & 1 #6 GND
175-4W	1	2"	4 #2/0 AWG & 1 #6 GND
200-3W	1	2"	3 #3/0 AWG & 1 #6 GND
200-4W	1	2"	4 #3/0 AWG & 1 #6 GND
225-3W	1	2 1/2"	3 #4/0 AWG & 1 #4 GND
225-4W	1	2 1/2"	4 #4/0 AWG & 1 #4 GND
250-3W	1	2 1/2"	3 #250 kCMIL & 1 #4 GND
250-4W	1	2 1/2"	4 #250 kCMIL & 1 #4 GND
300-3W	1	3"	3 #350 kCMIL & 1 #4 GND
300-4W	1	3"	4 #350 kCMIL & 1 #4 GND
350-3W	1	3"	3 #400 kCMIL & 1 #3 GND
350-4W	1	3"	4 #400 kCMIL & 1 #3 GND
400-3W	2	2"	3 #3/0 & 1 #3 GND
400-4W	2	2"	4 #3/0 & 1 #3 GND
450-3W	2	2 1/2"	3 #4/0 AWG & 1 #2 GND
450-4W	2	2 1/2"	4 #4/0 AWG & 1 #2 GND
500-3W	2	2 1/2"	3 #250 kCMIL & 1 #2 GND
500-4W	2	2 1/2"	4 #250 kCMIL & 1 #2 GND
600-3W	2	3"	3 #350 kCMIL & 1 #1 GND
600-4W	2	3"	4 #350 kCMIL & 1 #1 GND
700-3W	2	3"	3 #400 kCMIL & 1 #1/0 GND
700-4W	2	3"	4 #400 kCMIL & 1 #1/0 GND
800-3W	2	3 1/2"	3 #600 kCMIL & 1 #1/0 GND
800-4W	2	3 1/2"	4 #600 kCMIL & 1 #1/0 GND
1000-3W	3	3"	3 #400 kCMIL & 1 #2/0 GND
1000-4W	3	3"	4 #400 kCMIL & 1 #2/0 GND
1200-3W	3	4"	3 #600 kCMIL & 1 #3/0 GND
1200-4W	3	4"	4 #600 kCMIL & 1 #3/0 GND
1600-3W	4	4"	3 #600 kCMIL & 1 #4/0 GND
1600-4W	4	4"	4 #600 kCMIL & 1 #4/0 GND
2000-3W	5	4"	3 #600 kCMIL & 1 #250 kCMIL GND
2000-4W	5	4"	4 #600 kCMIL & 1 #250 kCMIL GND

THE SCHOOL DISTRICT OF PHILADELPHIA

OFFICE OF CAPITAL PROGRAMS

440 NORTH BROAD STREET
PHILADELPHIA, PA 19130 - 4015
(215) 400 - 4730 | (215) 400 - 4731 (fax)
www.philasd.org

SEAL:

NAME (LICENSED PROFESSIONAL): PETE BOHNES — DATE
STATE AND LICENSE NO: PA 046114E — 09/30/2020

FXB PARTNERSHIPS THROUGH ENGINEERING
5 Christy Drive, Suite 307
Chadds Ford, PA 19317
610.558.3464 office
www.fxbinc.com
Engineering Excellence Since 1968

CONTRACT #5
B-045C OF 2018/19 (ELECTRICAL CONTRACTOR)

NO.	DATE	REVISION
1	01.08.21	ISSUE FOR ADDENDUM #06
0	06.26.20	ISSUE FOR BID
D	08.30.19	ISSUE FOR 100% REVIEW
C	06.28.19	ISSUE FOR 90% REVIEW
B	04.26.19	ISSUE FOR 60% REVIEW
A	02.22.19	ISSUE FOR 25% REVIEW

SCHOOL & LOCATION

EDWARD GIDEON SCHOOL

2817 WEST GLENWOOD AVE.
PHILADELPHIA, PA 19121

PROJECT TITLE

ELECTRICAL UPGRADES

DRAWING TITLE

ELECTRICAL ONE-LINE DIAGRAM - INSTALLATION

DRAWN BY JMH | CHECKED BY PJB

DRAWING NO.

E4.1

SHEET 21 OF 45

PANEL SCHEDULE "EM"

VOLTS: 208Y/120V | PHASE: 3Φ | LOCATION: BASEMENT | SHORT CIRCUIT RATING: 22kAIC
AMPS: 100A MLO | WIRE: 4W | MOUNTING: SURFACE | PANEL LOAD: 7.0 kVA (19.4 A)

CIR. NO.	DESCRIPTION	LOAD kVA	WIRE SIZE	FUSES AMPS	POLES	Φ	FUSES AMPS	POLES	WIRE SIZE	LOAD kVA	DESCRIPTION	CIR. NO.
1	BASEMENT LIGHTING	0.5	#12	20	1	A	20	1	#12	0.5	STAIRWELL LIGHTING	2
3	BASEMENT LIGHTING	0.5	#12	20	1	B	20	1	#12	0.5	STAIRWELL LIGHTING	4
5	SPARE			20	1	C	20	1	#12	0.5	STAIRWELL LIGHTING	6
7	BLOCK HEATER - GENERATOR	1.5	#10	20	2	A	20	1	#12	0.5	STAIRWELL LIGHTING	8
9	▼	1.5	▼	▼	▼	B					SPACE	10
11	BATTERY CHARGER - GENERATOR	1.0	#10	20	1	C					SPACE	12
13	SPARE			20	1	A					SPACE	14
15	SPARE			20	1	B					SPACE	16
17	SPARE			20	1	C					SPACE	18
19	SPACE					A					SPACE	20
21	SPACE					B					SPACE	22
23	SPACE					C					SPACE	24
25	SPACE					A					SPACE	26
27	SPACE					B					SPACE	28
29	SPACE					C					SPACE	30
					A	B	C					
					3.0	2.5	1.5					

PANEL BOARD NOTES:
1. PANEL SHALL BE EQUAL TO BUSSMANN QSCP HINGED (DOOR-IN-DOOR) TRIM.
2. PROVIDE FEED-THRU LUG KIT.

PANEL SCHEDULE "EM1"

VOLTS: 208Y/120V | PHASE: 3Φ | LOCATION: FIRST FLOOR | SHORT CIRCUIT RATING: 22kAIC
AMPS: 100A MLO | WIRE: 4W | MOUNTING: SURFACE | PANEL LOAD: 16.9 kVA (46.9 A)

CIR. NO.	DESCRIPTION	LOAD kVA	WIRE SIZE	FUSES AMPS	POLES	Φ	FUSES AMPS	POLES	WIRE SIZE	LOAD kVA	DESCRIPTION	CIR. NO.
1	EXISTING AUDITORIUM LTG LOAD (RE-FED FROM PNL A2 IF REQ'D). NOTE 2.	0.4	#6	15	1	A	15	1	#12	0.4	EXISTING AUDITORIUM LTG LOAD (RE-FED FROM PNL A2 IF REQ'D). NOTE 2.	2
3	EXISTING AUDITORIUM LTG LOAD (RE-FED FROM PNL A2 IF REQ'D). NOTE 2.	0.4	#7	15	1	B	15	1	#12	0.4	EXISTING AUDITORIUM LTG LOAD (RE-FED FROM PNL A2 IF REQ'D). NOTE 2.	4
5	EXISTING AUDITORIUM LTG LOAD (RE-FED FROM PNL A2 IF REQ'D). NOTE 2.	0.4	#8	15	1	C	15	1	#12	0.4	EXISTING AUDITORIUM LTG LOAD (RE-FED FROM PNL A2 IF REQ'D). NOTE 2.	6
7	EXISTING AUDITORIUM LTG LOAD (RE-FED FROM PNL A2 IF REQ'D). NOTE 2.	0.4	#9	15	1	A	15	1	#12	0.4	EXISTING AUDITORIUM LTG LOAD (RE-FED FROM PNL A2 IF REQ'D). NOTE 2.	8
9	EXISTING AUDITORIUM LTG LOAD (RE-FED FROM PNL A2 IF REQ'D). NOTE 2.	0.4	#10	15	1	B	15	1	#12	0.4	EXISTING AUDITORIUM LTG LOAD (RE-FED FROM PNL A2 IF REQ'D). NOTE 2.	10
11	EXISTING AUDITORIUM LTG LOAD (RE-FED FROM PNL A2 IF REQ'D). NOTE 2.	0.4	#11	15	1	C	15	1	#12	0.4	EXISTING AUDITORIUM LTG LOAD (RE-FED FROM PNL A2 IF REQ'D). NOTE 2.	12
13	EXISTING AUDITORIUM LTG LOAD (RE-FED FROM PNL A2 IF REQ'D). NOTE 2.	0.4	#12	15	1	A	15	1	#12	0.4	EXISTING AUDITORIUM LTG LOAD (RE-FED FROM PNL A2 IF REQ'D). NOTE 2.	14
15	EXISTING AUDITORIUM LTG LOAD (RE-FED FROM PNL A2 IF REQ'D). NOTE 2.	0.4	#12	15	1	B	15	1	#12	0.4	EXISTING AUDITORIUM LTG LOAD (RE-FED FROM PNL A2 IF REQ'D). NOTE 2.	16
17	EXISTING AUDITORIUM LTG LOAD (RE-FED FROM PNL A2 IF REQ'D). NOTE 2.	0.4	#12	15	1	C	15	1	#12	0.4	EXISTING AUDITORIUM LTG LOAD (RE-FED FROM PNL A2 IF REQ'D). NOTE 2.	18
19	CORRIDOR LIGHTING	0.3	#12	20	1	A	20	1	#12	1.5	FIRE ALARM CONTROL PANEL POWER	20
21	CORRIDOR LIGHTING	0.3	#12	20	1	B	20	1	#12	0.4	EMERGENCY LIGHTING RESTROOMS	22
23	CLASSROOM AND NURSE LIGHTING	0.3	#12	20	1	C	20	1	#12	0.2	EMERGENCY LIGHTING - MAIN ENTRANCE	24
25	FIRE ALARM POWER BOOSTER	0.5	#12	20	1	A	20	1			SPARE	26
27	AUDITORIUM EMERENCY LIGHTING CONTROL CIRCUIT	0.2	#12	20	1	B	20	1			SPARE	28
29	SPARE			20	1	C	20	1			SPARE	30
					A	B	C					
					6.7	5.3	4.9					

PANEL BOARD NOTES:
1. PANEL SHALL BE EQUAL TO BUSSMANN QSCP HINGED (DOOR-IN-DOOR) TRIM.
2. INDICATED LOAD DESCRIPTION AND KVA ARE ESTIMATED. FIELD VERIFY.
3. PROVIDE FEED-THRU LUG KIT.

PANEL SCHEDULE "EM2"

VOLTS: 208Y/120V | PHASE: 3Φ | LOCATION: SECOND FLOOR | SHORT CIRCUIT RATING: 22kAIC
AMPS: 100A MLO | WIRE: 4W | MOUNTING: SURFACE | PANEL LOAD: 1.6 kVA (4.4 A)

CIR. NO.	DESCRIPTION	LOAD kVA	WIRE SIZE	FUSES AMPS	POLES	Φ	FUSES AMPS	POLES	WIRE SIZE	LOAD kVA	DESCRIPTION	CIR. NO.
1	CORRIDOR LIGHTING	0.4	#12	20	1	A					SPACE	2
3	CORRIDOR LIGHTING	0.4	#12	20	1	B					SPACE	4
5	BATHROOM LIGHTING	0.3	#12	20	1	C					SPACE	6
7	FIRE ALARM POWER BOOSTER	0.5	#12	20	1	A					SPACE	8
9	SPARE			20	1	B					SPACE	10
11	SPARE			20	1	C					SPACE	12
13	SPARE			20	1	A					SPACE	14
15	SPARE			20	1	B					SPACE	16
17	SPACE					C					SPACE	18
19	SPACE					A					SPACE	20
21	SPACE					B					SPACE	22
23	SPACE					C					SPACE	24
25	SPACE					A					SPACE	26
27	SPACE					B					SPACE	28
29	SPACE					C					SPACE	30
					A	B	C					
					0.9	0.4	0.3					

PANEL BOARD NOTES:
1. PANEL SHALL BE EQUAL TO BUSSMANN QSCP HINGED (DOOR-IN-DOOR) TRIM.
2. PROVIDE FEED-THRU LUG KIT.

PANEL SCHEDULE "EM3"

VOLTS: 208Y/120V | PHASE: 3Φ | LOCATION: THIRD FLOOR | SHORT CIRCUIT RATING: 22kAIC
AMPS: 100A MLO | WIRE: 4W | MOUNTING: SURFACE | PANEL LOAD: 2.2 kVA (6.1 A)

CIR. NO.	DESCRIPTION	LOAD kVA	WIRE SIZE	FUSES AMPS	POLES	Φ	FUSES AMPS	POLES	WIRE SIZE	LOAD kVA	DESCRIPTION	CIR. NO.
1	CORRIDOR LIGHTING	0.4	#12	20	1	A	20	1	#12	0.3	TOILET ROOM LIGHTING	2
3	CORRIDOR LIGHTING	0.4	#12	20	1	B					SPACE	4
5	REC ROOM LIGHTING	0.6	#12	20	1	C					SPACE	6
7	FIRE ALARM POWER BOOSTER	0.5	#12	20	1	A					SPACE	8
9	SPARE			20	1	B					SPACE	10
11	SPARE			20	1	C					SPACE	12
13	SPARE			20	1	A					SPACE	14
15	SPARE			20	1	B					SPACE	16
17	SPACE					C					SPACE	18
19	SPACE					A					SPACE	20
21	SPACE					B					SPACE	22
23	SPACE					C					SPACE	24
25	SPACE					A					SPACE	26
27	SPACE					B					SPACE	28
29	SPACE					C					SPACE	30
					A	B	C					
					1.2	0.4	0.6					

PANEL BOARD NOTES:
1. PANEL SHALL BE EQUAL TO BUSSMANN QSCP HINGED (DOOR-IN-DOOR) TRIM.

PANEL SCHEDULE "LP1"

VOLTS: 208Y/120V | PHASE: 3Φ | LOCATION: 1ST FLOOR | SHORT CIRCUIT RATING: 22kAIC
AMPS: 225A MLO | WIRE: 4W | MOUNTING: SURFACE | PANEL LOAD: 9.1 kVA (25.3 A)

CIR. NO.	DESCRIPTION	LOAD kVA	WIRE SIZE	CIRCUIT BKR AMPS	POLES	Φ	CIRCUIT BKR AMPS	POLES	WIRE SIZE	LOAD kVA	DESCRIPTION	CIR. NO.
1	LIGHTING - CLASSROOMS	0.9	#12	20	1	A					SPACE	2
3	LIGHTING - NURSE & OFFICE	0.4	#12	20	1	B					SPACE	4
5	LIGHTING - CLASSROOMS	0.9	#12	20	1	C					SPACE	6
7	LIGHTING - OFFICE	0.4	#12	20	1	A					SPACE	8
9	LIGHTING - CLASSROOMS	0.8	#12	20	1	B					SPACE	10
11	LIGHTING - OFFICE & RESTROOMS	0.5	#12	20	1	C					SPACE	12
13	SPARE			20	1	A					SPACE	14
15	LIGHTING - STAGE & BACKSTAGE EMERG LTG MONITORING POWER	0.7	#12	20	1	B					SPACE	16
17	LIGHTING - BOILER ROOM	0.8	#12	20	1	C					SPACE	18
19	LIGHTING - ASH STORAGE	0.5	#12	20	1	A					SPACE	20
21	LIGHTING - ELECTRICAL ROOM	0.4	#12	20	1	B					SPACE	22
23	LIGHTING - CORRIDOR	0.6	#12	20	1	C					SPACE	24
25	LIGHTING - CORRIDOR	0.7	#12	20	1	A					SPACE	26
27	LIGHTING - BASEMENT LIGHTING	0.5	#12	20	1	B					SPACE	28
29	LIGHTING - BASEMENT LIGHTING	1.0	#12	20	1	C					SPACE	30
31	SPARE			20	1	A					SPACE	32
33	SPARE			20	1	B					SPACE	34
35	SPARE			20	1	C					SPACE	36
37	SPARE			20	1	A					SPACE	38
39	SPARE			20	1	B					SPACE	40
41	SPARE			20	1	C					SPACE	42
				A		B	C					
				2.5		2.8	3.8					

PANEL BOARD NOTES:
1. PANEL SHALL BE SQUARE D CO. TYPE NQ (OR APPROVED EQUAL) WITH BOLT-ON BRANCH CIRCUIT BREAKERS AND HINGED (DOOR-IN-DOOR) TRIM.
2. PROVIDE FEED-THRU LUG KIT.

PANEL SCHEDULE "LP2"

VOLTS: 208Y/120V | PHASE: 3Φ | LOCATION: 2ND FLOOR | SHORT CIRCUIT RATING: 22kAIC
AMPS: 225A MLO | WIRE: 4W | MOUNTING: SURFACE | PANEL LOAD: 9.9 kVA (27.5 A)

CIR. NO.	DESCRIPTION	LOAD kVA	WIRE SIZE	CIRCUIT BKR AMPS	POLES	Φ	CIRCUIT BKR AMPS	POLES	WIRE SIZE	LOAD kVA	DESCRIPTION	CIR. NO.
1	LIGHTING - CLASSROOMS	0.9	#12	20	1	A	20	1	#10	0.6	LIGHTING - EXTERIOR #1	2
3	CLASSROOMS	0.9	#12	20	1	B	20	1	#10	0.5	LIGHTING - EXTERIOR #2	4
5	LIGHTING - CLASSROOMS	0.9	#12	20	1	C					SPACE	6
7	LIGHTING - CLASSROOMS	0.9	#12	20	1	A					SPACE	8
9	LIGHTING - CLASSROOMS	0.9	#12	20	1	B					SPACE	10
11	LIGHTING - CLASSROOMS	0.9	#12	20	1	C					SPACE	12
13	LIGHTING - STORAGE & RESTROOMS	0.5	#12	20	1	A					SPACE	14
15	LIGHTING - CLASSROOMS	0.9	#12	20	1	B					SPACE	16
17	LIGHTING - CORRIDOR	0.8	#12	20	1	C					SPACE	18
19	LIGHTING - CORRIDOR	0.8	#12	20	1	A					SPACE	20
21	LIGHTING - STORAGE	0.4	#12	20	1	B					SPACE	22
23	SPARE			20	1	C					SPACE	24
25	SPARE			20	1	A					SPACE	26
27	SPARE			20	1	B					SPACE	28
29	SPARE			20	1	C					SPACE	30
31	SPARE			20	1	A					SPACE	32
33	SPACE					B					SPACE	34
35	SPACE					C					SPACE	36
37	SPACE					A					SPACE	38
39	SPACE					B					SPACE	40
41	SPACE					C					SPACE	42
				A		B	C					
				3.7		3.6	2.6					

PANELBOARD NOTES:
1. PANEL SHALL BE SQUARE D CO. TYPE NQ (OR APPROVED EQUAL) WITH BOLT-ON BRANCH CIRCUIT BREAKERS AND HINGED (DOOR-IN-DOOR) TRIM.
2. PROVIDE FEED-THRU LUG KIT.

PANEL SCHEDULE "LP3"

VOLTS: 208Y/120V | PHASE: 3Φ | LOCATION: 3RD FLOOR | SHORT CIRCUIT RATING: 22kAIC
AMPS: 225A M.L.O. | WIRE: 4W | MOUNTING: SURFACE | PANEL LOAD: 14.9 kVA (41.4 A)

CIR. NO.	DESCRIPTION	LOAD kVA	WIRE SIZE	CIRCUIT BKR AMPS	POLES	Φ	CIRCUIT BKR AMPS	POLES	WIRE SIZE	LOAD kVA	DESCRIPTION	CIR. NO.
1	LIGHTING - CLASSROOMS	0.9	#12	20	1	A	20	1	#12	0.3	EXISTING LOAD (RE-FED FROM PNL H9 IF REQ'D). NOTE 2.	2
3	LIGHTING - OFFICES	0.7	#12	20	1	B	20	1	#12	0.3	EXISTING LOAD (RE-FED FROM PNL H9 IF REQ'D). NOTE 2.	4
5	LIGHTING - CLASSROOMS	0.9	#12	20	1	C	20	1	#12	0.3	EXISTING LOAD (RE-FED FROM PNL H9 IF REQ'D). NOTE 2.	6
7	LIGHTING - CLASSROOMS	0.9	#12	20	1	A	20	1	#12	0.3	EXISTING LOAD (RE-FED FROM PNL H9 IF REQ'D). NOTE 2.	8
9	LIGHTING - CLASSROOMS	0.9	#12	20	1	B	20	1	#12	0.3	EXISTING LOAD (RE-FED FROM PNL H9 IF REQ'D). NOTE 2.	10
11	LIGHTING - CLASSROOMS	0.9	#12	20	1	C	20	1	#12	0.3	EXISTING LOAD (RE-FED FROM PNL H9 IF REQ'D). NOTE 2.	12
13	LIGHTING - CLASSROOMS	0.9	#12	20	1	A	20	1	#12	0.3	EXISTING LOAD (RE-FED FROM PNL H9 IF REQ'D). NOTE 2.	14
15	LIGHTING - CLASSROOMS	0.9	#12	20	1	B	20	1	#12	0.3	EXISTING LOAD (RE-FED FROM PNL H9 IF REQ'D). NOTE 2.	16
17	LIGHTING - RESTROOMS & STORAGE	0.5	#12	20	1	C	20	1	#12	0.3	EXISTING LOAD (RE-FED FROM PNL H9 IF REQ'D). NOTE 2.	18
19	LIGHTING - REC ROOM & KITCHEN	1.0	#12	20	1	A	20	1	#12	0.3	EXISTING LOAD (RE-FED FROM PNL H9 IF REQ'D). NOTE 2.	20
21	LIGHTING - CORRIDOR	0.8	#12	20	1	B	20	1	#12	0.3	EXISTING LOAD (RE-FED FROM PNL H9 IF REQ'D). NOTE 2.	22
23	LIGHTING - CORRIDOR	0.8	#12	20	1	C	20	1	#12	0.3	EXISTING LOAD (RE-FED FROM PNL H9 IF REQ'D). NOTE 2.	24
25	SPARE			20	1	A	20	1	#12	0.3	EXISTING LOAD (RE-FED FROM PNL H9 IF REQ'D). NOTE 2.	26
27	SPARE			20	1	B	20	1	#12	0.3	EXISTING LOAD (RE-FED FROM PNL H9 IF REQ'D). NOTE 2.	28
29	SPARE			20	1	C	20	1	#12	0.3	EXISTING LOAD (RE-FED FROM PNL H9 IF REQ'D). NOTE 2.	30
31	SPARE			20	1	A	20	1	#12	0.3	EXISTING LOAD (RE-FED FROM PNL H9 IF REQ'D). NOTE 2.	32
33	SPACE					B					SPACE	34
35						C					SPACE	36
37						A					SPACE	38
39						B					SPACE	40
41						C					SPACE	42
				A		B	C					
				5.5		4.8	4.6					

PANELBOARD NOTES:
1. PANEL SHALL BE SQUARE D CO. TYPE NQ (OR APPROVED EQUAL) WITH BOLT-ON BRANCH CIRCUIT BREAKERS AND HINGED (DOOR-IN-DOOR) TRIM.
2. INDICATED LOAD DESCRIPTION AND KVA ARE ESTIMATED. FIELD VERIFY.

PANEL SCHEDULE "PP1"

EXISTING

VOLTS: 208Y/120V | PHASE: 3Φ | LOCATION: BOILER ROOM | SHORT CIRCUIT RATING: 10kAIC
AMPS: 175A MCB | WIRE: 4W | MOUNTING: SURFACE | PANEL LOAD: 48.6 kVA (134.9 A)

CIR. NO.	DESCRIPTION	LOAD kVA	WIRE SIZE	CIRCUIT BKR AMPS	POLES	Φ	CIRCUIT BKR AMPS	POLES	WIRE SIZE	LOAD kVA	DESCRIPTION	CIR. NO.
1	EXISTING BOILER #1	3.3		40	3	A	40	3		3.3	EXISTING BOILER #2	2
3	▼	3.3		▼	▼	B	▼	▼		3.3	▼	4
5	▼	3.3		▼	▼	C	▼	▼		3.3	▼	6
7	SPARE			30	3	A	40	3		3.3	EXISTING CONSTANT PRESSURE PUMPS	8
9	▼			▼	▼	B	▼	▼		3.3	▼	10
11	▼			▼	▼	C	▼	▼		3.3	▼	12
13	SPARE			20	3	A	20	3		1.7	EXISTING FUEL PUMP SET	14
15	▼			▼	▼	B	▼	▼		1.7	▼	16
17	▼			▼	▼	C	▼	▼		1.7	▼	18
19	EXISTING CONDENSATE PUMP	1.7		20	3	A	20	3			SPARE	20
21	▼	1.7		▼	▼	B	▼	▼			▼	22
23	▼	1.7		▼	▼	C	▼	▼			▼	24
25	EXISTING SUMP PUMP	1.7		20	3	A	15	3			SPARE	26
27	▼	1.7		▼	▼	B	▼	▼			▼	28
29	▼	1.7		▼	▼	C	▼	▼			▼	30
31	SPARE			15	3	A	15	3			SPARE	32
33	▼			▼	▼	B	▼	▼			▼	34
35	▼			▼	▼	C	▼	▼			▼	36
37	EXISTING BOILER CONTROL PANEL	0.5		20	1	A	20	1		0.5	EXISTING WATER SOFTNER	38
39	EXISTING LOAD	0.5		20	1	B	20	1		0.9	EXISTING UNIT HEATER	40
41	EXISTING CHEMICAL PUMP	0.9		20	1	C					SPACE	42
					A	B	C					
					16.1	16.5	16.0					

PANELBOARD NOTES:
1. ALL CIRCUIT BREAKERS ARE EXISTING TO REMAIN IN SERVICE.
2. INDICATED KVA LOAD IS ESTIMATED.

PANEL SCHEDULE "RP0"

VOLTS: 208Y/120V | PHASE: 3Φ | LOCATION: BASEMENT | SHORT CIRCUIT RATING: 35kAIC
AMPS: 400A MLO | WIRE: 4W | MOUNTING: SURFACE | PANEL LOAD: 90.2 kVA (250.6 A)

CIR. NO.	DESCRIPTION	LOAD kVA	WIRE SIZE	CIRCUIT BKR AMPS	POLES	Φ	CIRCUIT BKR AMPS	POLES	WIRE SIZE	LOAD kVA	DESCRIPTION	CIR. NO.
1	SPARE			20	1	A	20	1	#12	0.4	SECURITY HEAD END EQUIPMENT	2
3	SPARE			20	1	B	20	1	#12	0.2	SECURITY MONITOR	4
5	SPARE			20	1	C	50	2	#6	4.8	EXISTING LOAD 'GYM HEATER' (RE-FED FROM PNL P4 IF REQUIRED). NOTE 2.	6
7	RECEPTACLES OFFICE	0.5	#12	20	1	A	▼	▼	▼	4.8	▼	8
9	SPARE			20	1	B	50	2	#6	4.8	EXISTING LOAD 'NO ID' (RE-FED FROM PNL P4 IF REQUIRED). NOTE 2.	10
11	SPARE			20	1	C	▼	▼	▼	4.8	▼	12
13	SPARE			20	1	A	50	2	#6	4.8	(E) LOAD '201, 103, 306, FLR 1 HALL' (RE-FED FROM PNL P4 IF REQ'D). NOTE 2.	14
15	SPARE			20	1	B	▼	▼	▼	4.8	▼	16
17	SPARE			20	1	C	30	2	#10	2.9	EXISTING LOAD 'NO ID' (RE-FED FROM PNL P4 IF REQUIRED). NOTE 2.	18
19	SPARE			20	1	A	▼	▼	▼	2.9	▼	20
21	EXISTING LOAD (RE-FED FROM PNL P6 IF REQ'D). NOTE 2.	0.4	#12	15	1	B	50	2	#6	4.8	EXISTING LOAD 'N.E. BLDG. UNV.' (RE-FED FROM PNL P4 IF REQ'D). NOTE 2.	22
23	EXISTING LOAD (RE-FED FROM PNL P6 IF REQ'D). NOTE 2.	0.4	#12	15	1	C	▼	▼	▼	4.8	▼	24
25	EXISTING LOAD (RE-FED FROM PNL P6 IF REQ'D). NOTE 2.	0.4	#12	15	1	A	50	2	#6	4.8	EXISTING LOAD 'SPARE' (RE-FED FROM PNL P4 IF REQUIRED). NOTE 2.	26
27	EXISTING LOAD (RE-FED FROM PNL P6 IF REQ'D). NOTE 2.	0.4	#12	15	1	B	▼	▼	▼	4.8	▼	28
29	EXISTING LOAD (RE-FED FROM PNL P6 IF REQ'D). NOTE 2.	0.4	#12	15	1	C	50	2	#6	4.8	EXISTING LOAD 'NO IDENTIFICATION' (RE-FED FROM PNL P4 IF REQ'D). NOTE 2.	30
31	EXISTING LOAD (RE-FED FROM PNL P6 IF REQ'D). NOTE 2.	0.4	#12	15	1	A	▼	▼	▼	4.8	▼	32
33	EXISTING LOAD (RE-FED FROM PNL P6 IF REQ'D). NOTE 2.	0.4	#12	15	1	B	30	2	#10	2.9	EXISTING LOAD 'SPARE' (RE-FED FROM PNL P4 IF REQ'D). NOTE 2.	34
35	EXISTING LOAD (RE-FED FROM PNL P6 IF REQ'D). NOTE 2.	0.4	#12	15	1	C	▼	▼	▼	2.9	▼	36
37	EXISTING LOAD (RE-FED FROM PNL P6 IF REQ'D). NOTE 2.	0.4	#12	15	1	A	20	2	#12	1.7	EXISTING LOAD (RE-FED FROM PNL P1 IF REQ'D) NOTE 2.	38
39	EXISTING LOAD (RE-FED FROM PNL P6 IF REQ'D). NOTE 2.	0.4	#12	15	1	B	▼	▼	▼	1.7	▼	40
41	EXISTING LOAD (RE-FED FROM PNL P6 IF REQ'D). NOTE 2.	0.4	#12	15	1	C	20	2	#12	1.7	EXISTING LOAD (RE-FED FROM PNL P1 IF REQ'D) NOTE 2.	42
43	EXISTING LOAD (RE-FED FROM PNL P6 IF REQ'D). NOTE 2.	0.4	#12	15	1	A	▼	▼	▼	1.7	▼	44
45	EXISTING LOAD (RE-FED FROM PNL P6 IF REQ'D). NOTE 2.	0.4	#12	15	1	B	20	2	#12	1.7	EXISTING LOAD (RE-FED FROM PNL P1 IF REQ'D) NOTE 2.	46
47	EXISTING LOAD (RE-FED FROM PNL P6 IF REQ'D). NOTE 2.	0.4	#12	15	1	C	▼	▼	▼	1.7	▼	48
49	EXISTING LOAD (RE-FED FROM PNL P6 IF REQ'D). NOTE 2.	0.4	#12	15	1	A	20	2	#12	1.7	EXISTING LOAD (RE-FED FROM PNL P1 IF REQ'D) NOTE 2.	50
51	EXISTING LOAD (RE-FED FROM PNL P6 IF REQ'D). NOTE 2.	0.4	#12	15	1	B	▼	▼	▼	1.7	▼	52
53	SPARE			20	1	C	20	1			SPARE	54
					A	B	C					
					30.1	29.8	30.4					

PANELBOARD NOTES:
1. PANEL SHALL BE SQUARE D CO. TYPE NQ (OR APPROVED EQUAL) WITH BOLT-ON BRANCH CIRCUIT BREAKERS AND HINGED (DOOR-IN-DOOR) TRIM.
2. INDICATED LOAD DESCRIPTION AND KVA ARE ESTIMATED. FIELD VERIFY.

THE SCHOOL DISTRICT OF PHILADELPHIA

OFFICE OF CAPITAL PROGRAMS

440 NORTH BROAD STREET
PHILADELPHIA, PA 19130 - 4015
(215) 400 - 4730 | (215) 400 - 4731 (fax)
www.philasd.org

SEAL:

NAME (LICENSED PROFESSIONAL): PETE BONNES — DATE
STATE AND LICENSE NO: PA 046114E — 09/30/2020

FXB PARTNERSHIPS THROUGH ENGINEERING
5 Christy Drive, Suite 307
Chadds Ford, PA 19317
610.558.3464 office
www.fxbinc.com
Engineering Excellence Since 1968

CONTRACT #'S
8-045C OF 2018/19 (ELECTRICAL CONTRACTOR)

NO.	DATE	REVISION
1	01.08.21	ISSUE FOR ADDENDUM #06
0	04.26.20	ISSUE FOR BID
D	08.30.19	ISSUE FOR 100% REVIEW
C	06.28.19	ISSUE FOR 90% REVIEW
B	04.26.19	ISSUE FOR 60% REVIEW
A	02.22.19	ISSUE FOR 25% REVIEW

SCHOOL & LOCATION

EDWARD GIDEON SCHOOL

2817 WEST GLENWOOD AVE.
PHILADELPHIA, PA 19121

PROJECT TITLE

ELECTRICAL UPGRADES

DRAWING TITLE

ELECTRICAL PANEL SCHEDULES - INSTALLATION

DRAWN BY: JMH | CHECKED BY: PJB

DRAWING NO. E4.3

SHEET 23 OF 45

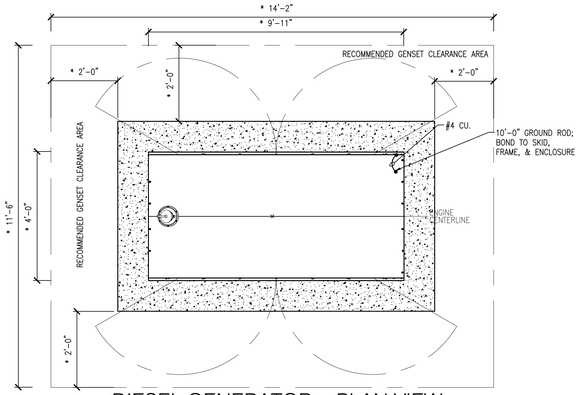

DIESEL GENERATOR - PLAN VIEW

SCALE: NONE

* COORDINATE EXACT PAD DIMENSIONS WITH APPROVED MANUFACTURER SUBMITTAL DRAWINGS.

CONCRETE NOTES:

1. CONTRACTOR TO VERIFY ALL CONDITIONS AND DIMENSIONS BEFORE STARTING WORK.
2. CONTRACTOR SHALL VERIFY SUB-SURFACE CONDITIONS BEFORE ANY FOUNDATIONS ARE PLACED. ASSUMED SOIL BEARING CAPACITY 3000 P.S.F.
3. FOR ALL CONCRETE WORK A.C.I. STANDARD BUILDING CODE REQUIREMENTS FOR REINFORCED CONCRETE (A.C.I. 318-) WILL BE APPLICABLE UNLESS NOTED.
4. ALL CONCRETE SHALL BE POURED IN FORMS CONFORMING TO THE DIMENSIONS SHOWN ON THE DRAWINGS.
5. NO CONCRETE SHALL BE POURED UNTIL ALL REINFORCING STEEL IS IN PLACE.
6. ALL CONCRETE TO DEVELOP 3500 P.S.I. IN 28 DAYS.
7. ALL DETAILING, FABRICATION & PLACEMENT OF REINFORCING BARS SHALL FOLLOW THE A.C.I. MANUAL OF STANDARD PRACTICE FOR DETAILING REINFORCED CONCRETE STRUCTURES A.C.I. 315. HIGH CHAIRS WILL BE REQUIRED UNDER ALL TOP REINFORCING.
8. REINFORCING BARS TO BE GRADE 60 DEFORMED NEW BILLET STEEL MEETING ASTM SPECS A-615 AND HAVING DEFORMATION MEETING ASTM A-305.
9. PROVIDE 3/4" CHAMFER ON EXPOSED EDGES OF ALL CONCRETE PADS.
10. ALL EQUIPMENT PADS SHALL BEAR ON UNDISTURBED, FIRM NATURAL SOIL OR COMPACTED FILL.
11. ALL REINFORCING MARKED CONTINUOUS SHALL BE LAPPED 36XBAR DIAMETER AT SPLICES UNLESS OTHERWISE NOTED.
12. FORMWORK SHALL REMAIN IN PLACE UNTIL CONCRETE HAS OBTAINED AT LEAST 90% OF ITS 28 DAY COMPRESSIVE STRENGTH.
13. THE FINISH TOLERANCE OF ALL SLABS SHALL BE IN ACCORDANCE WITH ACI 301, TYPE A.

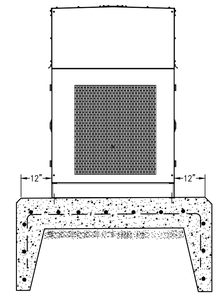

DIESEL GENERATOR SECTION "A-A"

SCALE: 1/2"=1'-0"

* COORDINATE EXACT DIMENSIONS WITH APPROVED MANUFACTURER SUBMITTAL DRAWINGS.

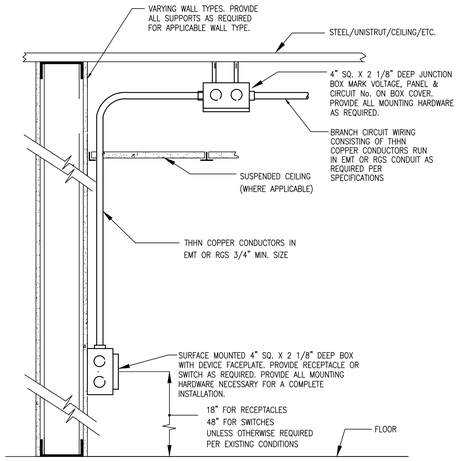

1 / E5.0 SURFACE MOUNTED DEVICE INSTALLATION

SCALE: NONE (120 -277V VOLT DEVICES)

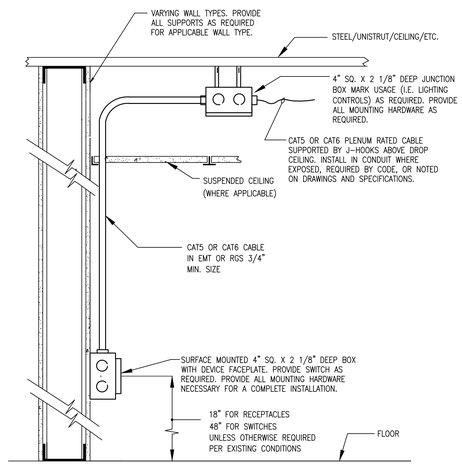

2 / E5.0 SURFACE MOUNTED DEVICE INSTALLATION

SCALE: NONE LOW VOLTAGE DEVICES

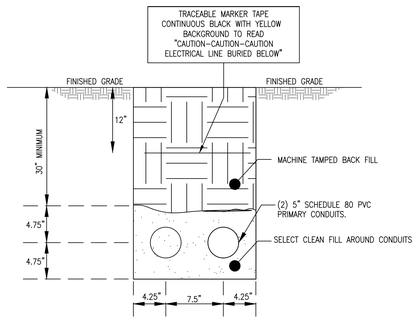

SECTION "A-A" PRIMARY DUCT BANK DETAIL

SCALE: NO SCALE

NOTES:

1. PROVIDE RIGID GALVANIZED STEEL CONDUIT FROM UNDERGROUND DUCTS TO TERMINATION ABOVE GRADE.
2. ALL CONDUIT BENDS SHALL BE LARGE RADIUS.
3. FINISHED GRADE TO MATCH EXISTING CONDITIONS. INCLUDE ALL CONCRETE, ASPHALT, GRASS SEED, OR OTHER REQUIRED MATERIAL.
4. CONDUITS SHALL SLOPE AWAY FROM THE BUILDING OR EQUIPMENT WHERE THE CONDUIT TERMINATES.

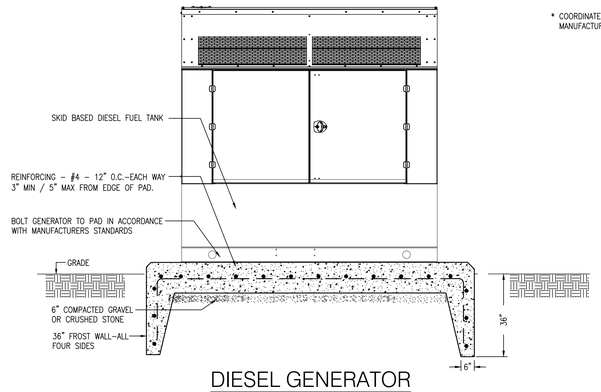

DIESEL GENERATOR SECTION "B-B"

SCALE: NONE

* COORDINATE EXACT DIMENSIONS WITH APPROVED MANUFACTURER SUBMITTAL DRAWINGS.

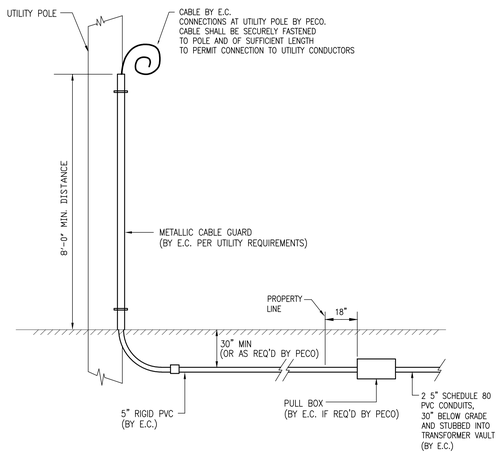

4 / E5.0 UNDERGROUND SERVICE DETAIL (PRIMARY FEEDER)

SCALE: NONE

NOTES:

1. SEE PECO BLUE BOOK FOR MORE INFORMATION.

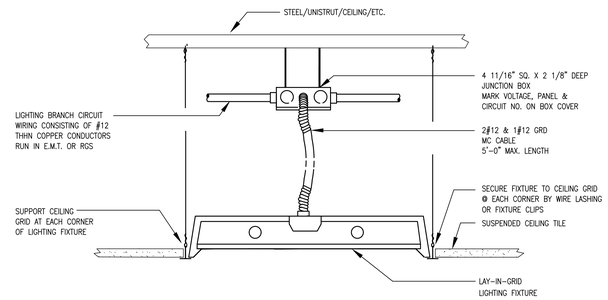

3 / E5.0 GRID MOUNTED FIXTURE INSTALLATION DETAIL

SCALE: NONE

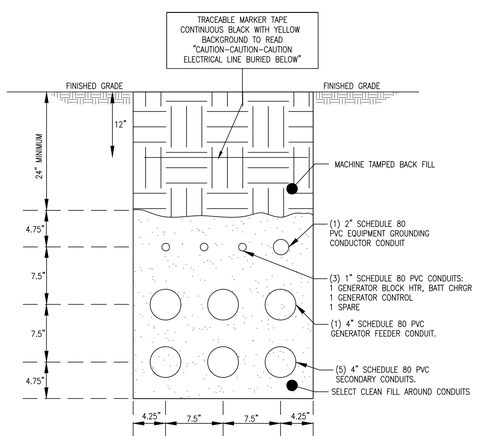

SECTION "B-B" SECONDARY DUCT BANK DETAIL

SCALE: NO SCALE

NOTES:

1. PROVIDE RIGID GALVANIZED STEEL CONDUIT FROM UNDERGROUND DUCTS TO TERMINATION ABOVE GRADE.
2. ALL CONDUIT BENDS SHALL BE LARGE RADIUS.
3. FINISHED GRADE TO MATCH EXISTING CONDITIONS. INCLUDE ALL CONCRETE, ASPHALT, GRASS SEED, OR OTHER REQUIRED MATERIAL.
4. CONDUITS SHALL SLOPE AWAY FROM THE BUILDING OR EQUIPMENT WHERE THE CONDUIT TERMINATES.

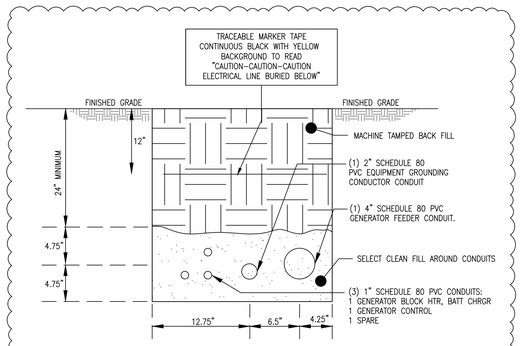

SECTION "C-C" GENERATOR DUCT BANK DETAIL

SCALE: NO SCALE

NOTES:

1. PROVIDE RIGID GALVANIZED STEEL CONDUIT FROM UNDERGROUND DUCTS TO TERMINATION ABOVE GRADE.
2. ALL CONDUIT BENDS SHALL BE LARGE RADIUS.
3. FINISHED GRADE TO MATCH EXISTING CONDITIONS. INCLUDE ALL CONCRETE, ASPHALT, GRASS SEED, OR OTHER REQUIRED MATERIAL.
4. CONDUITS SHALL SLOPE AWAY FROM THE BUILDING OR EQUIPMENT WHERE THE CONDUIT TERMINATES.

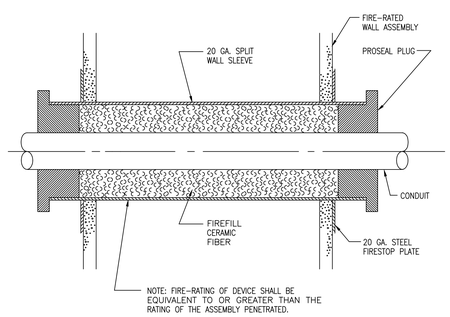

5 / E5.0 CONDUIT THROUGH FIRE RATED WALL DETAIL

SCALE: NONE

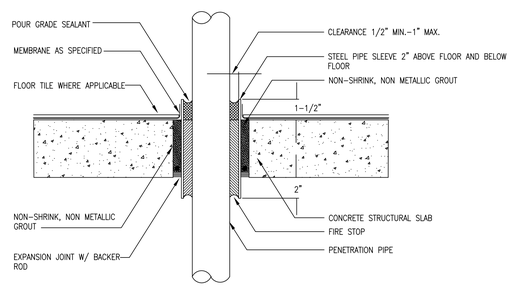

6 / E5.0 TYPICAL FLOOR PENETRATION

SCALE: NONE

NOTES:

1. VERIFY REINFORCING LOCATIONS PRIOR TO CORING FLOOR.

THE SCHOOL DISTRICT OF PHILADELPHIA

OFFICE OF CAPITAL PROGRAMS

440 NORTH BROAD STREET
PHILADELPHIA, PA 19130 - 4015
(215) 400 - 4730 | (215) 400 - 4731 (fax)
www.philasd.org

SEAL:

NAME (LICENSED PROFESSIONAL): PETE BONNES
STATE AND LICENSE NO: PA 046114E
DATE 09/30/2020

FXB PARTNERSHIPS THROUGH ENGINEERING
5 Christy Drive, Suite 307
Chadds Ford, PA 19317
610.558.3464 office
www.fxbinc.com
Engineering Excellence Since 1968

CONTRACT #'S
B-045C OF 2018/19 (ELECTRICAL CONTRACTOR)

NO.	DATE	REVISION
1	01.08.21	ISSUE FOR ADDENDUM #06
0	06.26.20	ISSUE FOR BID
D	08.30.19	ISSUE FOR 100% REVIEW
C	06.28.19	ISSUE FOR 90% REVIEW
B	04.26.19	ISSUE FOR 60% REVIEW
A	02.22.19	ISSUE FOR 25% REVIEW

SCHOOL & LOCATION

EDWARD GIDEON SCHOOL

2817 WEST GLENWOOD AVE.
PHILADELPHIA, PA 19121

PROJECT TITLE

ELECTRICAL UPGRADES

DRAWING TITLE

ELECTRICAL DETAILS

DRAWN BY JMH | CHECKED BY PJB

DRAWING NO. E5.0

SHEET 26 OF 45

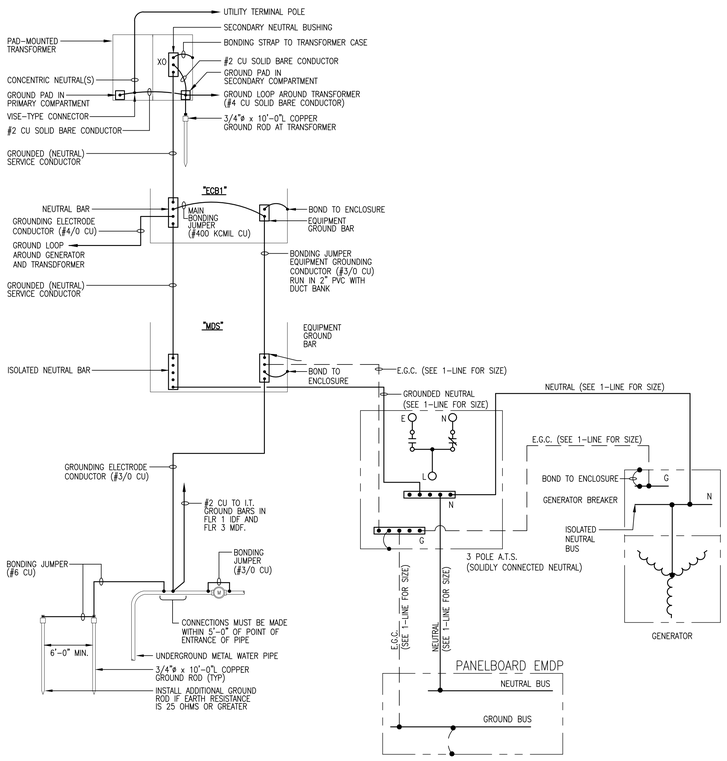

1 / E5.1 SERVICE GROUNDING SCHEMATIC

SCALE: NONE

NOTES:

1. SERVICE GROUNDING MUST COMPLY WITH NEC 250.
2. ALL UNDERGROUND CONNECTIONS SHALL BE CADWELD.
3. ABOVE GROUND GAS PIPING SHALL BE BONDED TO THE GROUNDING SYSTEM AS PER NFPA-54, 7.13. GAS PIPING SHALL NOT BE USED AS GROUNDING ELECTRODE [SEE NEC 250.52(B)(1)]; SEE 250.104(3)(B) FOR FURTHER INSTRUCTIONS RELATED TO GAS PIPING.
4. CONNECTION TO CONCRETE-ENCASED ELECTRODE IF PRACTICAL.
5. CONNECT TO ALL PRESENT GROUNDING ELECTRODES PER NEC ARTICLE 250.

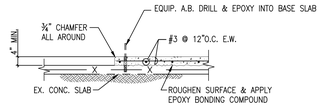

3 / E5.1 TYPICAL CONCRETE PAD ON EXISTING SLAB

SCALE: NONE

NOTES:

1. VERFIFY ALL DIMENSIONS WITH APPROVED VENDOR SHOP DRAWINGS.

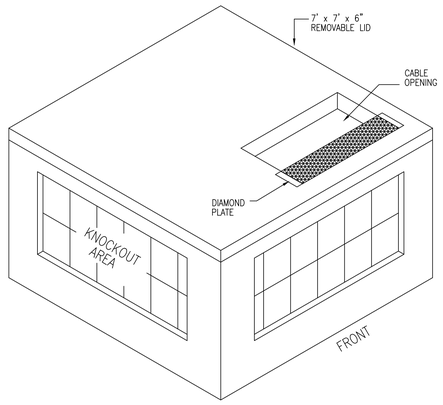

ISOMETRIC VIEW

NOT TO SCALE

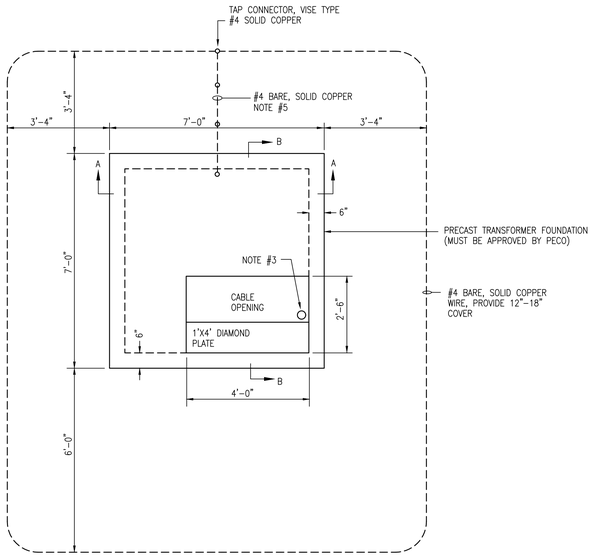

4 / E5.1 TRANSFORMER FOUNDATION DETAIL

SCALE: NONE

NOTES:

1. ALL INDICATED IS NEW BY E.C., UNLESS NOTED OTHERWISE.
2. SET PRECAST TRANSFORMER FOUNDATION ON CRUSHED STONE; MINIMUM EXCAVATION IS 8' x 8' x 5' DEEP.
3. INSTALL WITH TOP APPROXIMATELY 3" ABOVE GRADE.
4. METERING CONDUIT ENTERING 6" ABOVE VAULT LID IN FRONT RIGHT CORNER OF CABLE OPENING. PROVIDE 1 1/2" RGS METERING CONDUIT & GROUNDING BUSHING. RUN METERING CONDUIT TO METER LOCATION.
5. EXTEND TO GROUND ROD AND #2/0 COPPER WIRE EXTENDING THROUGH WALL OF PRECAST TRANSFORMER FOUNDATION.
6. COORDINATE EXACT LOCATION OF TRANSFORMER WITH PECO.
7. REFER TO PECO BLUEBOOK FIGURE 12.11 FOR ADDITIONAL INFORMATION AND BILL OF MATERIALS
8. IF PRIMARY VOLTAGE IS 33 KV, VAULT DIMENSIONS WILL BE 8' X 8' X 4'-6" (EXCLUDING LID); MINIMUM EXCAVATION IS 9' X 9' X 5' DEEP (SEE PECO BLUEBOOK FIGURE 12.12 FOR ADDITIONAL INFORMATION AND BILL OF MATERIALS)

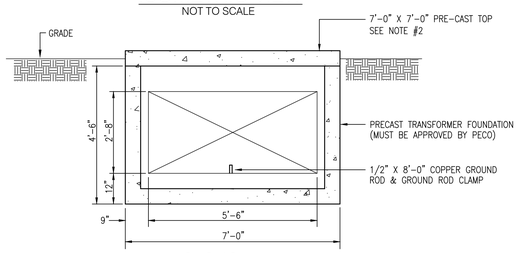

SECTION "A-A"

SCALE: NONE

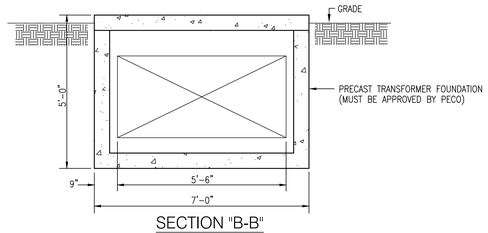

SECTION "B-B"

SCALE: NONE

THE SCHOOL DISTRICT OF PHILADELPHIA

OFFICE OF CAPITAL PROGRAMS

440 NORTH BROAD STREET
PHILADELPHIA, PA 19130 - 4015

(215) 400 - 4730 | (215) 400 - 4731 (fax)
www.philasd.org

SEAL:

NAME (LICENSED PROFESSIONAL): PETE BONNES
STATE AND LICENSE NO: PA 046114E
DATE 09/30/2020

FXB PARTNERSHIPS THROUGH ENGINEERING

5 Christy Drive, Suite 307
Chadds Ford, PA 19317
610.558.3464 office
www.fxbinc.com

Engineering Excellence Since 1968

CONTRACT #'S

B-045C OF 2018/19 (ELECTRICAL CONTRACTOR)

NO.	DATE	REVISION
1	01.08.21	ISSUE FOR ADDENDUM #06
0	06.26.20	ISSUE FOR BID
D	08.30.19	ISSUE FOR 100% REVIEW
C	06.28.19	ISSUE FOR 90% REVIEW
B	04.26.19	ISSUE FOR 60% REVIEW
A	02.22.19	ISSUE FOR 25% REVIEW

SCHOOL & LOCATION

EDWARD GIDEON SCHOOL

2817 WEST GLENWOOD AVE.
PHILADELPHIA, PA 19121

PROJECT TITLE

ELECTRICAL UPGRADES

DRAWING TITLE

ELECTRICAL DETAILS

DRAWN BY JMH | CHECKED BY PJB

DRAWING NO. E5.1

SHEET 27 OF 45

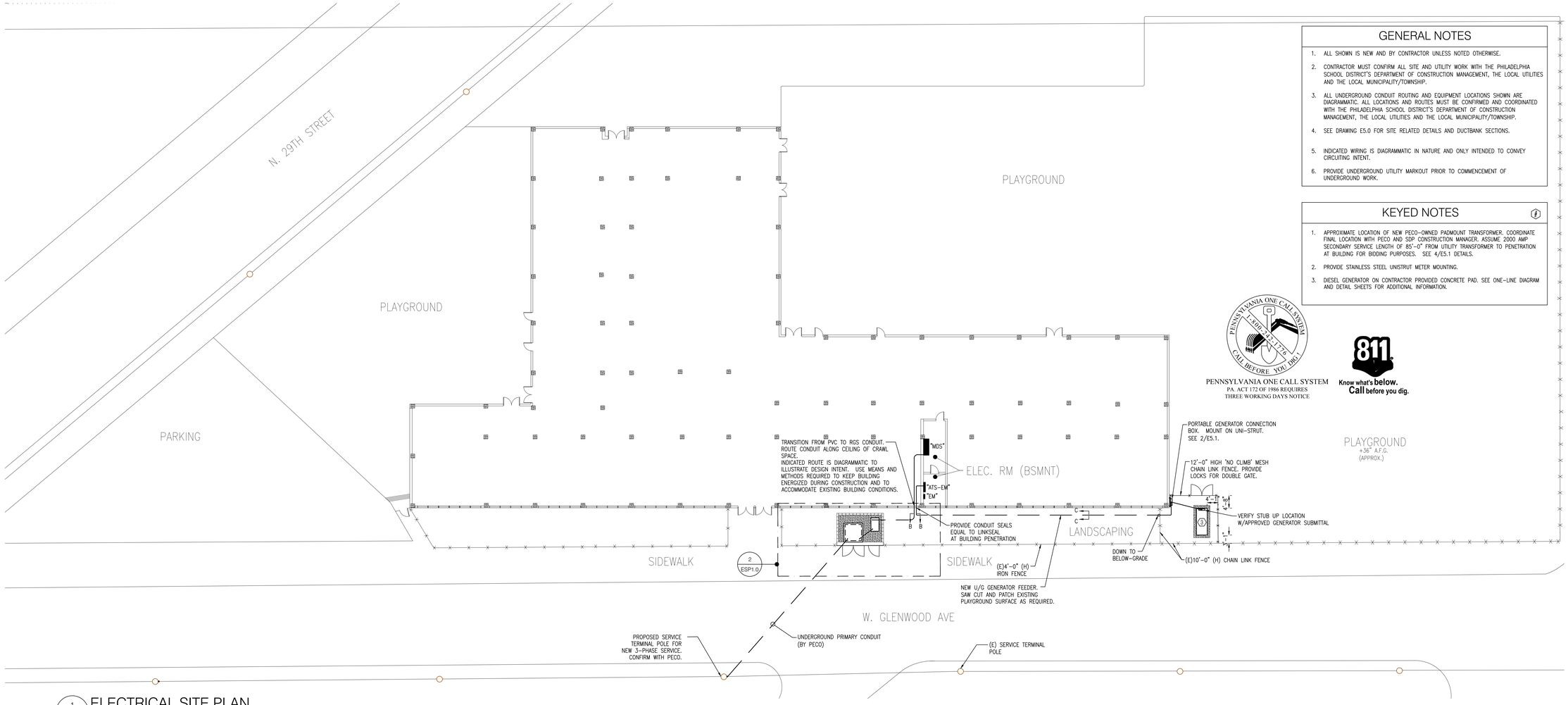

GENERAL NOTES

1. ALL SHOWN IS NEW AND BY CONTRACTOR UNLESS NOTED OTHERWISE.
2. CONTRACTOR MUST CONFIRM ALL SITE AND UTILITY WORK WITH THE PHILADELPHIA SCHOOL DISTRICT'S DEPARTMENT OF CONSTRUCTION MANAGEMENT, THE LOCAL UTILITIES AND THE LOCAL MUNICIPALITY/TOWNSHIP.
3. ALL UNDERGROUND CONDUIT ROUTING AND EQUIPMENT LOCATIONS SHOWN ARE DIAGRAMMATIC. ALL LOCATIONS AND ROUTES MUST BE CONFIRMED AND COORDINATED WITH THE PHILADELPHIA SCHOOL DISTRICT'S DEPARTMENT OF CONSTRUCTION MANAGEMENT, THE LOCAL UTILITIES AND THE LOCAL MUNICIPALITY/TOWNSHIP.
4. SEE DRAWING E5.0 FOR SITE RELATED DETAILS AND DUCTBANK SECTIONS.
5. INDICATED WIRING IS DIAGRAMMATIC IN NATURE AND ONLY INTENDED TO CONVEY CIRCUITING INTENT.
6. PROVIDE UNDERGROUND UTILITY MARKOUT PRIOR TO COMMENCEMENT OF UNDERGROUND WORK.

KEYED NOTES

1. APPROXIMATE LOCATION OF NEW PECO-OWNED PADMOUNT TRANSFORMER. COORDINATE FINAL LOCATION WITH PECO AND SDP CONSTRUCTION MANAGER. ASSUME 2000 AMP SECONDARY SERVICE LENGTH OF 85'-0" FROM UTILITY TRANSFORMER TO PENETRATION AT BUILDING FOR BIDDING PURPOSES. SEE 4/E5.1 DETAILS.
2. PROVIDE STAINLESS STEEL UNISTRUT METER MOUNTING.
3. DIESEL GENERATOR ON CONTRACTOR PROVIDED CONCRETE PAD. SEE ONE-LINE DIAGRAM AND DETAIL SHEETS FOR ADDITIONAL INFORMATION.

PENNSYLVANIA ONE CALL SYSTEM
PA. ACT 172 OF 1986 REQUIRES THREE WORKING DAYS NOTICE

811 Know what's below. Call before you dig.

1 ESP1.0 ELECTRICAL SITE PLAN

SCALE: 1/16"=1'-0"

NOTES:

1. ALL INDICATED IS NEW AND BY E.C., UNLESS NOTED OTHERWISE.

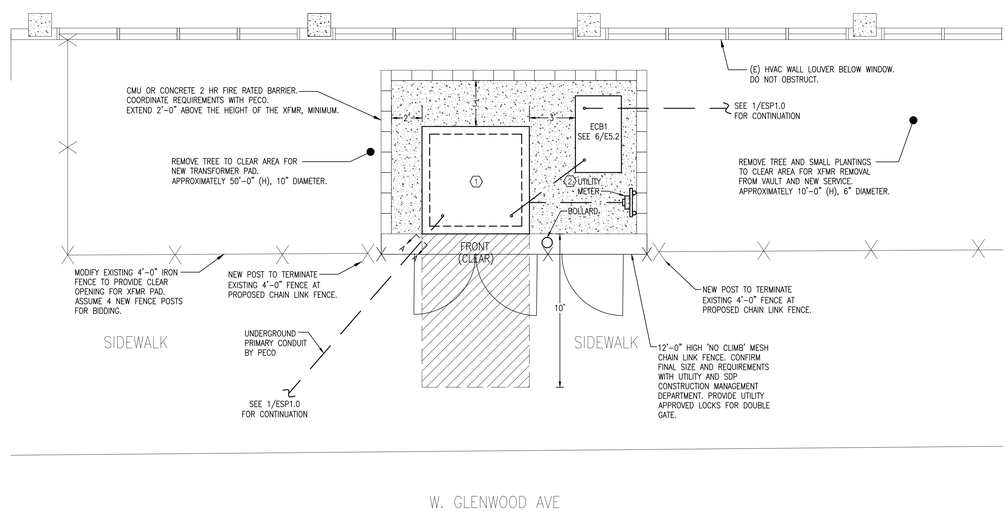

2 ESP1.0 ELECTRICAL ENLARGED TRANSFORMER & GENERATOR

SCALE: 1/4"=1'-0"

THE SCHOOL DISTRICT OF PHILADELPHIA

OFFICE OF CAPITAL PROGRAMS

440 NORTH BROAD STREET
PHILADELPHIA, PA 19130 - 4015

(215) 400 - 4730 | (215) 400 - 4731 (fax)
www.philasd.org

SEAL:

NAME (LICENSED PROFESSIONAL): PETE BONNES
STATE AND LICENSE NO: PA 046114E
DATE 09/30/2020

FXB PARTNERSHIPS THROUGH ENGINEERING

5 Christy Drive, Suite 307
Chadds Ford, PA 19317
610.558.3464 office
www.fxbinc.com

Engineering Excellence Since 1968

CONTRACT #'S
B-045C OF 2018/19 (ELECTRICAL CONTRACTOR)

NO.	DATE	REVISION
1	01.08.21	ISSUE FOR ADDENDUM #06
0	06.26.20	ISSUE FOR BID
D	08.30.19	ISSUE FOR 100% REVIEW
C	06.28.19	ISSUE FOR 90% REVIEW
B	04.26.19	ISSUE FOR 60% REVIEW
A	02.22.19	ISSUE FOR 25% REVIEW

SCHOOL & LOCATION

EDWARD GIDEON SCHOOL

2817 WEST GLENWOOD AVE.
PHILADELPHIA, PA 19121

PROJECT TITLE

ELECTRICAL UPGRADES

DRAWING TITLE

ELECTRICAL SITE PLAN

DRAWN BY JMH | CHECKED BY PJB

DRAWING NO.

ESP1.0

SHEET 31 OF 45

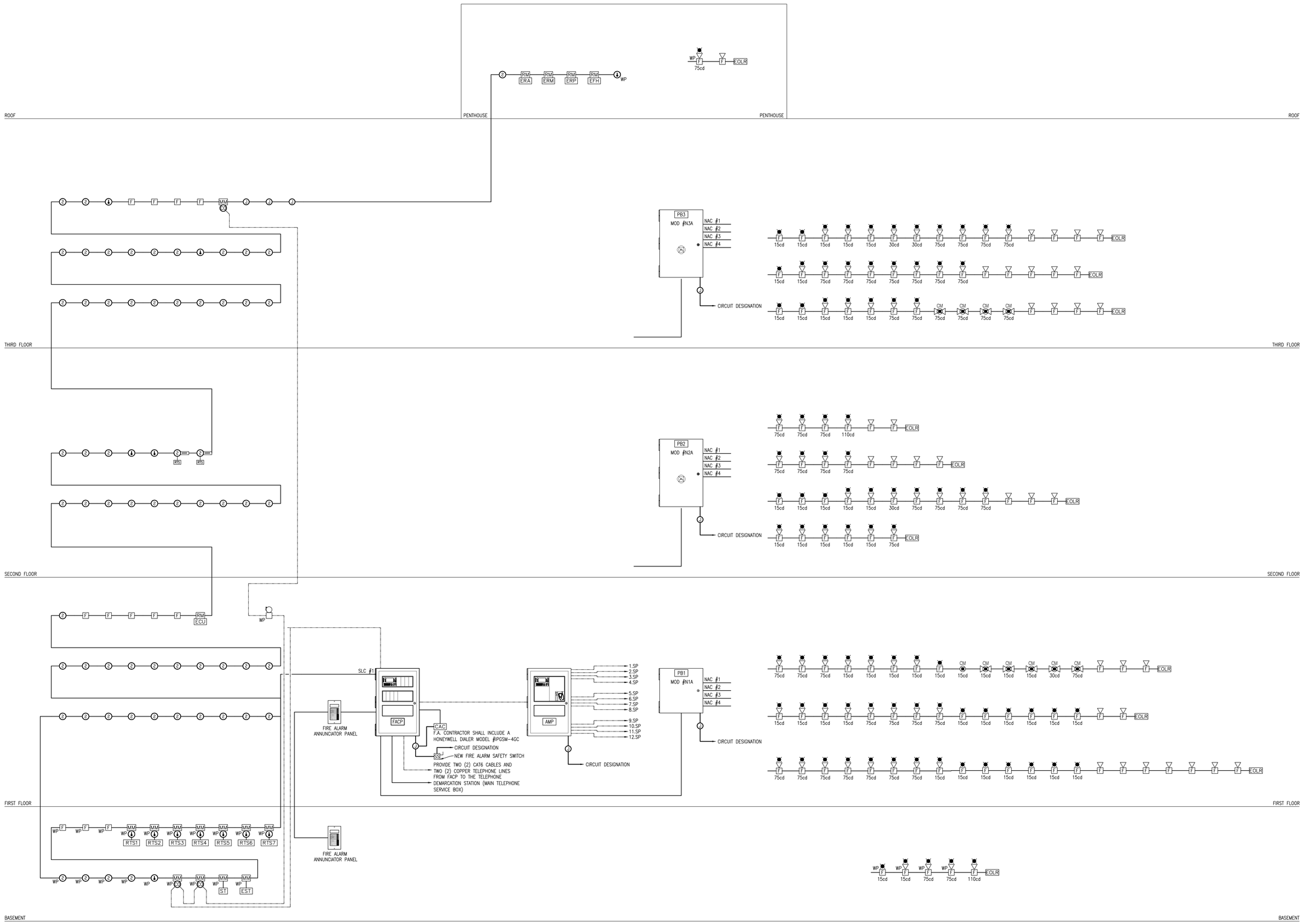

1 FA4.0 FIRE ALARM RISER DIAGRAM

SCALE: NONE

THE SCHOOL DISTRICT OF PHILADELPHIA

OFFICE OF CAPITAL PROGRAMS

440 NORTH BROAD STREET
PHILADELPHIA, PA 19130 - 4015

(215) 400 - 4730 | (215) 400 - 4731 (fax)
www.philasd.org

SEAL:

NAME (LICENSED PROFESSIONAL): PETE BONNES
STATE AND LICENSE NO: PA 046114E
DATE 09/30/2020

FXB PARTNERSHIPS THROUGH ENGINEERING

5 Christy Drive, Suite 307
Chadds Ford, PA 19317
610.558.3464 office
www.fxbinc.com

Engineering Excellence Since 1968

CONTRACT #'S
B-045C OF 2018/19 (ELECTRICAL CONTRACTOR)

NO.	DATE	REVISION
1	01.08.21	ISSUE FOR ADDENDUM #06
0	06.26.20	ISSUE FOR BID
D	08.30.19	ISSUE FOR 100% REVIEW
C	06.28.19	ISSUE FOR 90% REVIEW
B	04.26.19	ISSUE FOR 60% REVIEW
A	02.22.19	ISSUE FOR 25% REVIEW

SCHOOL & LOCATION

EDWARD GIDEON SCHOOL

2817 WEST GLENWOOD AVE.
PHILADELPHIA, PA 19121

PROJECT TITLE

ELECTRICAL UPGRADES

DRAWING TITLE

FIRE ALARM RISER AND DETAILS

DRAWN BY JMH
CHECKED BY PJB

DRAWING NO.

FA4.0

SHEET 41 OF 45

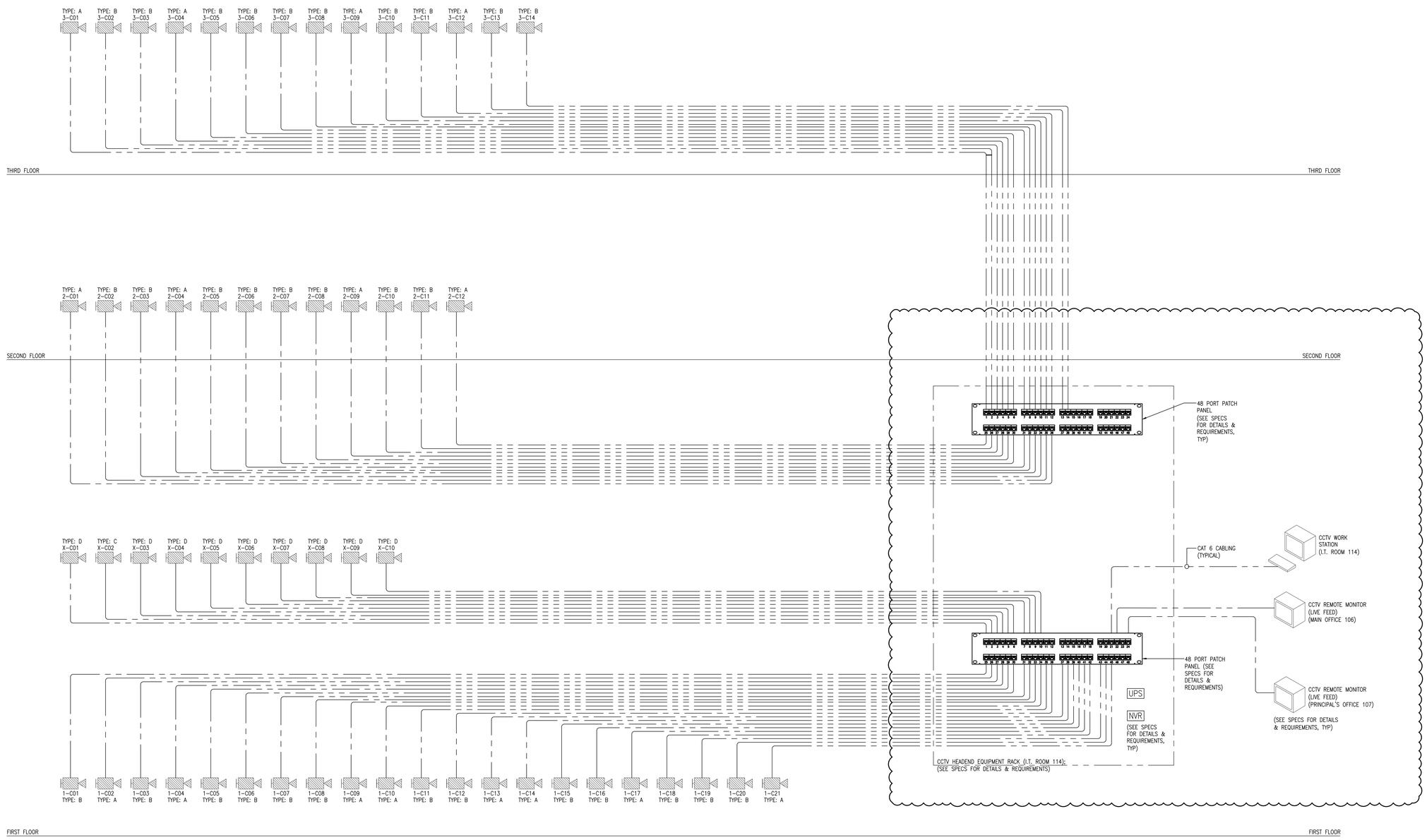

1 / SC3.0 SECURITY ONE-LINE DIAGRAM

SCALE: NONE

NOTES:

1. ALL SHOWN IS NEW BY E.C. UNLESS SPECIFICALLY NOTED OTHERWISE.
2. SEE SPECS FOR FURTHER DETAILS & REQUIREMENTS.
3. RACK SHALL BE MINIMUM 30" DEEP TO ACCOMMODATE NVR; SEE SPECIFICATIONS.

THE SCHOOL DISTRICT OF PHILADELPHIA

OFFICE OF CAPITAL PROGRAMS

440 NORTH BROAD STREET
PHILADELPHIA, PA 19130 - 4015

(215) 400 - 4730 | (215) 400 - 4731 (fax)
www.phillasd.org

SEAL:

NAME (LICENSED PROFESSIONAL): PETE BONNES
STATE AND LICENSE NO: PA 046114E
DATE 09/30/2020

FXB PARTNERSHIPS THROUGH ENGINEERING

5 Christy Drive, Suite 307
Chadds Ford, PA 19317
610.558.3464 office
www.fxbinc.com

Engineering Excellence Since 1968

CONTRACT #'S
B-045C OF 2018/19 (ELECTRICAL CONTRACTOR)

NO.	DATE	REVISION
1	01.08.21	ISSUE FOR ADDENDUM #06
0	06.26.20	ISSUE FOR BID
D	08.30.19	ISSUE FOR 100% REVIEW
C	06.28.19	ISSUE FOR 90% REVIEW
B	04.26.19	ISSUE FOR 60% REVIEW
A	02.22.19	ISSUE FOR 25% REVIEW

SCHOOL & LOCATION

EDWARD GIDEON SCHOOL

2817 WEST GLENWOOD AVE.
PHILADELPHIA, PA 19121

PROJECT TITLE

ELECTRICAL UPGRADES

DRAWING TITLE

SECURITY ONE-LINE DIAGRAM

DRAWN BY JMH
CHECKED BY PJB

DRAWING NO.

SC3.0

SHEET 46 OF 45